Data Sheet | Item Number: 2604-3512

PCB terminal block; lever; 4 mm²; Pin spacing 11.5 mm; 12-pole; Push-in CAGE CLAMP®; gray

https://www.wago.com/2604-3512

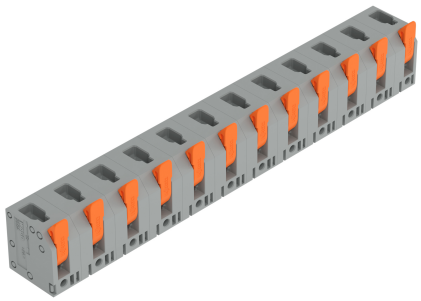

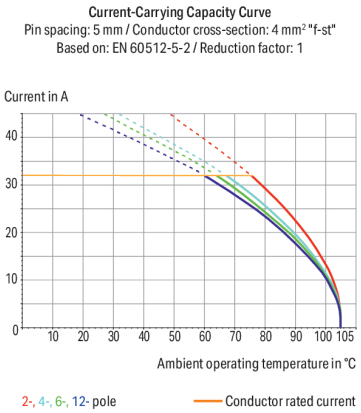

Color: gray

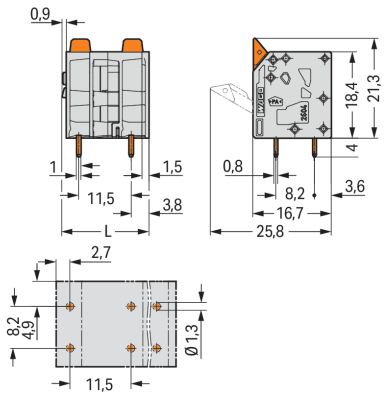

Dimensions in mm
L = (pole no. – 1) x pin spacing + 7.4 mm

PCB terminal block, 2604 Series, Push-in CAGE CLAMP®

Easily, quickly and safely connect conductors with this PCB terminal block (item number 2604-3512). It offers the flexibility needed for different mounting types. Ensure that the strip lengths are between 9 and 11 mm when connecting conductors to this PCB terminal block. This product features one conductor terminal and utilizes Push-in CAGE CLAMP®. Our Push-in CAGE CLAMP® is a universal, maintenance-free connection solution for all conductor types, featuring a winning design: It allows direct insertion of both solid and fine-stranded conductors with ferrules without needing tools. No preparation is required; for example, crimping the conductor's ferrule is not necessary. Dimensions: (133.9 x 25.3 x 16.7) mm (width x height x depth). Depending on the conductor type, this PCB terminal block is designed for conductor cross sections ranging from 0.2 mm² to 4 mm². The contact surface is coated with tin. This PCB terminal block is operated with a lever. THT is used to assemble the PCB terminal block. The conductor is designed to be inserted at a 90° angle..

Notes

General safety information	**NOTICE: Observe installation and safety instructions!** **To be sold only with installation instructions!**
Variants:	Other pole numbers Direct marking Other colors Other versions (or variants) can be requested from WAGO Sales or configured at https://configurator.wago.com/.

Electrical data

Ratings per	IEC/EN 60664-1		
Overvoltage category	III	III	II
Pollution degree	3	2	2
Nominal voltage	1000 V	1000 V	1000 V
Rated impulse withstand voltage	8 kV	8 kV	8 kV
Rated current	32 A	32 A	32 A

Approvals per	UL 1059		
Use group	B	C	D
Rated voltage	600 V	600 V	-
Rated current	20 A	20 A	-

Approvals per	CSA		
Use group	B	C	D
Rated voltage	600 V	600 V	-
Rated current	20 A	20 A	-

Connection Data

Clamping units	12
Total number of potentials	12
Number of connection types	1
Number of levels	1

Connection 1

Connection technology	Push-in CAGE CLAMP®
Actuation type	Lever
Solid conductor	0.2 … 4 mm² / 24 … 12 AWG
Fine-stranded conductor	0.2 … 4 mm² / 24 … 12 AWG
Fine-stranded conductor; with insulated ferrule	0.25 … 2.5 mm²
Fine-stranded conductor; with uninsulated ferrule	0.25 … 2.5 mm²
Fine-stranded conductor; with twin ferrule	0.25 … 1.5 mm²
Strip length	9 … 11 mm / 0.35 … 0.43 inches
Conductor connection direction to PCB	90 °
Pole number	12

Physical data

Pin spacing	11.5 mm / 0.453 inches
Width	133.9 mm / 5.272 inches
Height	25.3 mm / 0.996 inches
Height from the surface	21.3 mm / 0.839 inches
Depth	16.7 mm / 0.657 inches
Solder pin length	4 mm
Solder pin dimensions	0.8 x 1 mm
Drilled hole diameter	1.3 $^{(+0.1)}$ mm

Continued on next page

PCB contact

PCB contact	THT
Solder pin arrangement	over the entire terminal strip (in-line)
Number of solder pins per potential	2

Material data

Note (material data)	Information on material specifications can be found here
Color	gray
Material group	I
Insulation material (main housing)	Polyamide (PA66)
Flammability class per UL94	V0
Clamping spring material	Chrome-nickel spring steel (CrNi)
Contact material	Electrolytic copper (E_{Cu})
Contact Plating	Tin
Fire load	0.603 MJ
Actuator color	orange
Weight	31.8 g

Environmental requirements

Limit temperature range	-60 … +105 °C
Processing temperature	-35 … +60 °C
Continuous operating temperature	-60 … +105 °C

Commercial data

PU (SPU)	10 pcs
Packaging type	Box
Country of origin	PL
GTIN	4066966391565
Customs tariff number	85369010000

Product Classification

UNSPSC	39121409
eCl@ss 10.0	27-44-04-01
eCl@ss 9.0	27-44-04-01
ETIM 9.0	EC002643
ETIM 10.0	EC002643
ECCN	NO US CLASSIFICATION

Environmental Product Compliance

RoHS Compliance Status	Compliant,No Exemption

Continued on next page

Approvals / Certificates

General approvals

Approval	Standard	Certificate Name
CB DEKRA Certification B.V.	IEC 60947-7-4	NL-61583
KEMA/KEUR DEKRA Certification B.V.	EN 60947-7-4	71-100535
UL Underwriters Laboratories Inc.	UL 1059	E45172

Approvals for hazardous areas

Approval	Standard	Certificate Name
AEx Underwriters Laboratories Inc.	UL 60079	E185892
ATEX Physikalisch Technische Bundesanstalt	IEC 60079	PTB 24 ATEX 1005 U
IECEx Physikalisch Technische Bundesanstalt	IEC 60079	IECEx PTB 24.0016U

Downloads

Environmental Product Compliance

Compliance Search

Environmental Product Compliance 2604-3512

Documentation

Safety Data Sheet

Handling and Safety Instructions of PCB Terminal Blocks with Push-In Cage Clamp	pdf 393.90 KB	

Additional Information

Technical Section	03.04.2019	pdf 2027.26 KB

CAD/CAE-Data

CAD data

2D/3D Models 2604-3512

CAE data

ZUKEN Portal 2604-3512

PCB Design

Symbol and Footprint via SamacSys 2604-3512

Symbol and Footprint via Ultra Librarian 2604-3512

Continued on next page

1 Compatible Products

1.1 Optional Accessories

1.1.1 Ferrule

1.1.1.1 Ferrule

Item No.: 216-241
Ferrule; Sleeve for 0.5 mm² / 20 AWG; insulated; electro-tin plated; electrolytic copper; gastight crimped; acc. to DIN 46228, Part 4/09.90; white

Item No.: 216-242
Ferrule; Sleeve for 0.75 mm² / 18 AWG; insulated; electro-tin plated; electrolytic copper; gastight crimped; acc. to DIN 46228, Part 4/09.90; gray

Item No.: 216-243
Ferrule; Sleeve for 1 mm² / AWG 18; insulated; electro-tin plated; electrolytic copper; gastight crimped; acc. to DIN 46228, Part 4/09.90; red



Item No.: 216-244
Ferrule; Sleeve for 1.5 mm² / AWG 16; insulated; electro-tin plated; electrolytic copper; gastight crimped; acc. to DIN 46228, Part 4/09.90; black



Item No.: 216-246
Ferrule; Sleeve for 2.5 mm² / AWG 14; insulated; electro-tin plated; electrolytic copper; gastight crimped; acc. to DIN 46228, Part 4/09.90; blue



Item No.: 216-106
Ferrule; Sleeve for 2.5 mm² / AWG 14; uninsulated; electro-tin plated; silver-colored

Installation Notes

Conductor termination



Insert fine-stranded conductors – and remove all conductors – via operating tool.

Conductor termination



Insert solid conductors via push-in termination.