Data Sheet | Item Number: 2606-1101

PCB terminal block; lever; 6 mm²; Pin spacing 7.5 mm; 1-pole; Push-in CAGE CLAMP®; 6,00 mm²; gray

https://www.wago.com/2606-1101

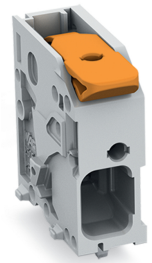

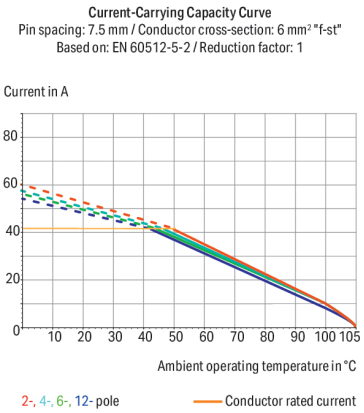

Color: gray

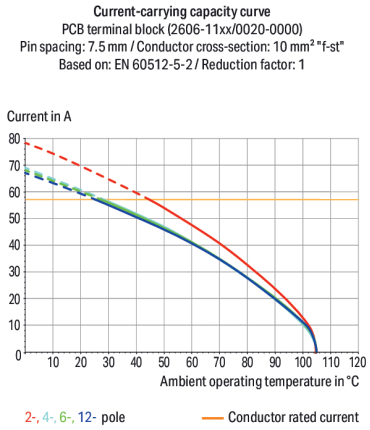

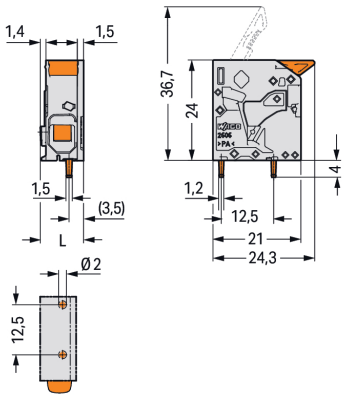

Dimensions in mm
L = 10.35 mm

PCB terminal block, 2606 Series, 0 °conductor entry to board

Quick and easy connections are guaranteed with this PCB terminal block (item number 2606-1101). It is ideal for custom installations with different mounting types. Strip lengths must be between 11 and 13 mm when connecting conductors to this PCB terminal block. This product incorporates one conductor terminal and utilizes Push-in CAGE CLAMP®. Push-in CAGE CLAMP® connection technology is ideal for connecting all conductor types. It allows direct insertion of both solid and fine-stranded conductors with ferrules without the need for tools—all thanks to its pluggable design. Dimensions: (10.35 x 28 x 24.3) mm (width x height x depth). This PCB terminal block is suitable for conductor cross sections ranging from 0.2 mm² to 10 mm².

Perfect termination for all conductor types thanks to Push-in CAGE CLAMP®

Tin is used for coating the contact surfaces. This PCB terminal block is operated with a lever. The PCB terminal block is designed for THT soldering. The conductor is designed to be inserted into the board at an angle of 0°..

- Pin spacing: 7,5 mm
- Permanently secure connections
- Soldering via THT
- Actuation via lever
- Number of poles: 1

Notes

General safety information	**NOTICE: Observe installation and safety instructions!** **To be sold only with installation instructions!**
Note	The inherent stability of a single-pole PCB terminal block is less than that of a multi-pole terminal strip. The customer must therefore ensure that these terminal blocks are protected against excessive mechanical stress (e.g., torsional or bending stress), both when connecting the conductor and during subsequent use, for example by providing additional support, shortly holding the connected conductor and appropriate actuation instructions.
Variants:	Other pole numbers Direct marking Other colors Other versions (or variants) can be requested from WAGO Sales or configured at https://configurator.wago.com/.

Electrical data

Ratings per	IEC/EN 60664-1		
Overvoltage category	III	III	II
Pollution degree	3	2	2
Nominal voltage	1000 V	1000 V	1000 V
Rated impulse withstand voltage	8 kV	8 kV	8 kV
Rated current	41 A	41 A	41 A

Approvals per	UL 1059		
Use group	B	C	D
Rated voltage	600 V	600 V	-
Rated current	31 A	31 A	-

Approvals per	CSA		
Use group	B	C	D
Rated voltage	600 V	1000 V	-
Rated current	31 A	31 A	-

Connection Data

Clamping units	1
Total number of potentials	1
Number of connection types	1
Number of levels	1

Connection 1

Connection technology	Push-in CAGE CLAMP®
Actuation type	Lever
Solid conductor	0.2 … 10 mm² / 24 … 8 AWG
Fine-stranded conductor	0.2 … 10 mm² / 24 … 8 AWG
Fine-stranded conductor; with insulated ferrule	0.25 … 6 mm²
Fine-stranded conductor; with uninsulated ferrule	0.25 … 6 mm²
Fine-stranded conductor; with twin ferrule	0.25 … 2.5 mm²
Strip length	11 … 13 mm / 0.43 … 0.51 inches
Conductor connection direction to PCB	0 °
Pole number	1

Physical data

Pin spacing	7.5 mm / 0.295 inches
Width	10.35 mm / 0.407 inches
Height	28 mm / 1.102 inches
Height from the surface	24 mm / 0.945 inches
Depth	24.3 mm / 0.957 inches
Solder pin length	4 mm
Solder pin dimensions	1.5 x 1.2 mm
Drilled hole diameter	$2^{(+0.1)}$ mm

Continued on next page

PCB contact

PCB contact	THT
Solder pin arrangement	over the entire terminal strip (in-line)
Number of solder pins per potential	2

Material data

Note (material data)	Information on material specifications can be found here
Color	gray
Material group	I
Insulation material (main housing)	Polyamide (PA66)
Flammability class per UL94	V0
Clamping spring material	Chrome-nickel spring steel (CrNi)
Contact material	Electrolytic copper (E_{Cu})
Contact Plating	Tin
Fire load	0.068 MJ
Actuator color	orange
Weight	4.5 g

Environmental requirements

Limit temperature range	-60 … +105 °C
Processing temperature	-35 … +60 °C
Continuous operating temperature	-60 … +105 °C

Environmental Testing

Test specification: Railway applications – Rolling stock – Electronic equipment	DIN EN 50155 (VDE 0115-200):2022-06
Test procedure: Railway applications – Rolling stock equipment – Vibration and shock tests	DIN EN 61373 (VDE 0115-0106):2011-04
Spectrum/Mounting location	Service life test, Category 1, Class A/B
Functional test with noise-like oscillations	Test passed according to Section 8 of the standard
Frequency	f_1 = 5 Hz to f_2 = 150 Hz
Acceleration	0.101g (highest test level used for all axes)
Test duration per axis	10 min.
Test directions	X, Y and Z axes
Monitoring of contact faults and interruptions	Passed
Voltage drop measurement before and after each axis	Passed
Simulated service life test through increased levels of noise-like oscillations	Test passed according to Section 9 of the standard
Frequency	f_1 = 5 Hz to f_2 = 150 Hz
Acceleration	0.572g (highest test level used for all axes)
Test duration per axis	5 h
Test directions	X, Y and Z axes
Extended testing: Monitoring of contact faults and interruptions	Passed
Extended testing: Voltage drop measurement before and after each axis	Passed
Shock test	Test passed according to Section 10 of the standard
Shock pulse form	Half sine
Acceleration	5g (highest test level used for all axes)
Shock duration	30 ms
Number of shocks (per axis)	3 pos. und 3 neg.
Test directions	X, Y and Z axes
Extended testing: Monitoring of contact faults and interruptions	Passed

 Continued on next page

Environmental Testing

Extended testing: Voltage drop measurement before and after each axis	Passed
Vibration and shock stress for rolling stock equipment	Passed

Commercial data

PU (SPU)	200 pcs
Packaging type	Box
Country of origin	PL
GTIN	4055143586405
Customs tariff number	85369010000

Product Classification

UNSPSC	39121409
eCl@ss 10.0	27-44-04-01
eCl@ss 9.0	27-44-04-01
ETIM 9.0	EC002643
ETIM 10.0	EC002643
ECCN	NO US CLASSIFICATION

Environmental Product Compliance

RoHS Compliance Status	Compliant,No Exemption

Approvals / Certificates

General approvals

Approval	Standard	Certificate Name
CB DEKRA Certification B.V.	IEC 60947-7-4	NL-103311
CSA CSA Group	C22.2	70146882
UL Underwriters Laboratories Inc.	UL 1059	UL-US-L45172-6187172-92117102-1

Declarations of conformity and manufacturer's declarations

Approval	Standard	Certificate Name
Railway WAGO GmbH & Co. KG	-	Z00004412.000

Downloads

Environmental Product Compliance

Compliance Search

Environmental Product Compliance 2606-1101

 Continued on next page

Documentation

Safety Data Sheet

Handling and Safety Instructions of PCB Terminal Blocks with Push-In Cage Clamp	pdf 393.90 KB	

Additional Information

Technical Section	03.04.2019	pdf 2027.26 KB

CAD/CAE-Data

CAD data

2D/3D Models
2606-1101

CAE data

ZUKEN Portal 2606-1101

PCB Design

Symbol and Footprint via
SamacSys 2606-1101

Symbol and Footprint via
Ultra Librarian
2606-1101

1 Compatible Products

1.1 Optional Accessories

1.1.1 Ferrule

1.1.1.1 Ferrule

Item No.: 216-263
Ferrule; Sleeve for 1 mm² / AWG 18; insulated; electro-tin plated; electrolytic copper; gastight crimped; acc. to DIN 46228, Part 4/09.90; red



Item No.: 216-264
Ferrule; Sleeve for 1.5 mm² / AWG 16; insulated; electro-tin plated; electrolytic copper; gastight crimped; acc. to DIN 46228, Part 4/09.90; black



Item No.: 216-266
Ferrule; Sleeve for 2.5 mm² / AWG 14; insulated; electro-tin plated; electrolytic copper; gastight crimped; acc. to DIN 46228, Part 4/09.90; blue



Item No.: 216-267
Ferrule; Sleeve for 4 mm² / AWG 12; insulated; electro-tin plated; electrolytic copper; gastight crimped; acc. to DIN 46228, Part 4/09.90; gray



Item No.: 216-208
Ferrule; Sleeve for 6 mm² / AWG 10; insulated; electro-tin plated; electrolytic copper; gastight crimped; acc. to DIN 46228, Part 4/09.90; yellow



Item No.: 216-108
Ferrule; Sleeve for 6 mm² / AWG 10; uninsulated; electro-tin plated; silver-colored

Installation Notes

Conductor termination

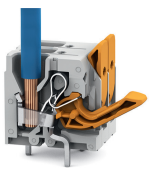

Insert fine-stranded conductors – and remove all conductors – via operating tool.

Conductor termination

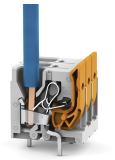

Insert solid conductors via push-in termination.