Data Sheet | Item Number: 2606-1111/020-000

PCB terminal block; lever; 6 mm²; Pin spacing 7.5 mm; 11-pole; Push-in CAGE CLAMP®; gray

https://www.wago.com/2606-1111/020-000

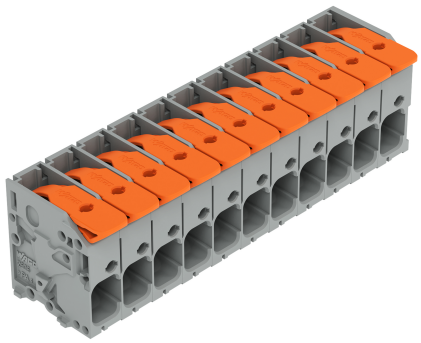

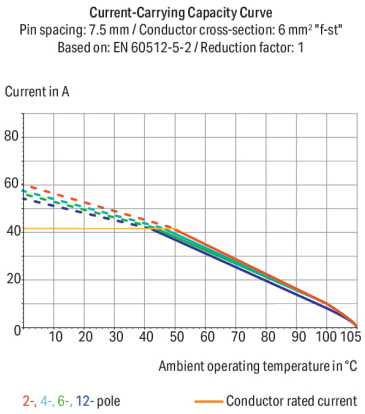

Color: gray

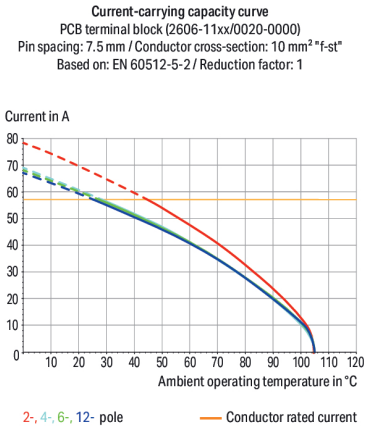

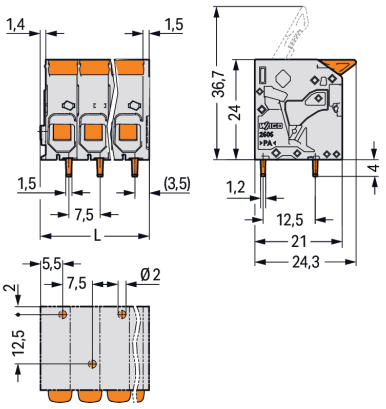

Dimensions in mm
L = (pole no. – 1) x pin spacing + 10.35 mm

PCB terminal block, 2606 Series, with 7.5 mm pin spacing

Our PCB terminal block (item number 2606-1111/020-000) simplifies electrical installations. It is ideal for custom installations with different mounting types. Conductors should only be connected to this PCB terminal block if their strip length is between 11 and 13 mm . This product features one conductor terminal and utilizes Push-in CAGE CLAMP®. Our Push-in CAGE CLAMP® is a universal, maintenance-free connection solution for all conductor types, offering a key advantage: both solid and fine-stranded conductors with ferrules can be directly inserted without the need for tools or any preparation, such as crimping the ferrule. The item's dimensions are (85.35 x 28 x 24.3) mm (width x height x depth). This PCB terminal block is suitable for conductor cross sections ranging from 0.2 mm² to 10 mm². Tin is used for coating the contact surfaces. A lever is used to operate this PCB terminal block. The PCB terminal block is designed for THT soldering. The conductor is designed to be inserted into the board at a 0° angle..

Notes

General safety information	**NOTICE: Observe installation and safety instructions!** **To be sold only with installation instructions!**
Variants:	Other pole numbers Direct marking Other colors Other versions (or variants) can be requested from WAGO Sales or configured at https://configurator.wago.com/.

Electrical data

Ratings per	IEC/EN 60664-1		
Overvoltage category	III	III	II
Pollution degree	3	2	2
Nominal voltage	800 V	1000 V	1000 V
Rated impulse withstand voltage	8 kV	8 kV	8 kV
Rated current	41 A	41 A	41 A

Approvals per	UL 1059		
Use group	B	C	D
Rated voltage	300 V	150 V	-
Rated current	31 A	31 A	-

Approvals per	CSA		
Use group	B	C	D
Rated voltage	600 V	600 V	-
Rated current	31 A	31 A	-

Connection Data

Clamping units	11
Total number of potentials	11
Number of connection types	1
Number of levels	1

Connection 1

Connection technology	Push-in CAGE CLAMP®
Actuation type	Lever
Solid conductor	0.2 … 10 mm² / 24 … 8 AWG
Fine-stranded conductor	0.2 … 10 mm² / 24 … 8 AWG
Fine-stranded conductor; with insulated ferrule	0.2 … 6 mm²
Fine-stranded conductor; with uninsulated ferrule	0.5 … 6 mm²
Fine-stranded conductor; with twin ferrule	0.25 … 2.5 mm²
Strip length	11 … 13 mm / 0.43 … 0.51 inches
Conductor connection direction to PCB	0 °
Pole number	11

Physical data

Pin spacing	7.5 mm / 0.295 inches
Width	85.35 mm / 3.36 inches
Height	28 mm / 1.102 inches
Height from the surface	24 mm / 0.945 inches
Depth	24.3 mm / 0.957 inches
Solder pin length	4 mm
Solder pin dimensions	1.5 x 1.2 mm
Drilled hole diameter	2 $^{(+0.1)}$ mm

Continued on next page

PCB contact

PCB contact	THT
Solder pin arrangement	over the entire terminal strip (staggered)
Number of solder pins per potential	1

Material data

Note (material data)	Information on material specifications can be found here
Color	gray
Material group	I
Insulation material (main housing)	Polyamide (PA66)
Flammability class per UL94	V0
Clamping spring material	Chrome-nickel spring steel (CrNi)
Contact material	Electrolytic copper (E_{Cu})
Contact Plating	Tin
Fire load	0.593 MJ
Actuator color	orange
Weight	42.1 g

Environmental requirements

Limit temperature range	-60 … +105 °C
Processing temperature	-35 … +60 °C
Continuous operating temperature	-60 … +105 °C

Commercial data

PU (SPU)	18 pcs
Packaging type	Box
Country of origin	PL
GTIN	4066966396430
Customs tariff number	85369010000

Product Classification

UNSPSC	39121409
eCl@ss 10.0	27-44-04-01
eCl@ss 9.0	27-44-04-01
ETIM 9.0	EC002643
ETIM 10.0	EC002643
ECCN	NO US CLASSIFICATION

Environmental Product Compliance

RoHS Compliance Status	Compliant,No Exemption

Continued on next page

Approvals / Certificates

General approvals

Approval	Standard	Certificate Name
CB DEKRA Certification B.V.	IEC 60947-7-4	NL-103311
CSA CSA Group	C22.2	70146882
UL Underwriters Laboratories Inc.	UL 1059	UL-US-L45172-6187172-92117102-1

Downloads

Environmental Product Compliance

Compliance Search

Environmental Product Compliance
2606-1111/020-000

Documentation

Safety Data Sheet

Handling and Safety Instructions of PCB Terminal Blocks with Push-In Cage Clamp	pdf 393.90 KB	

Additional Information

Technical Section	03.04.2019	pdf 2027.26 KB

CAD/CAE-Data

CAD data

2D/3D Models
2606-1111/020-000

CAE data

ZUKEN Portal
2606-1111/020-000

PCB Design

Symbol and Footprint via SamacSys
2606-1111/020-000

Symbol and Footprint via Ultra Librarian
2606-1111/020-000

1 Compatible Products

1.1 Optional Accessories

1.1.1 Ferrule

1.1.1.1 Ferrule

Item No.: 216-263
Ferrule; Sleeve for 1 mm² / AWG 18; insulated; electro-tin plated; electrolytic copper; gastight crimped; acc. to DIN 46228, Part 4/09.90; red



Item No.: 216-264
Ferrule; Sleeve for 1.5 mm² / AWG 16; insulated; electro-tin plated; electrolytic copper; gastight crimped; acc. to DIN 46228, Part 4/09.90; black



Item No.: 216-266
Ferrule; Sleeve for 2.5 mm² / AWG 14; insulated; electro-tin plated; electrolytic copper; gastight crimped; acc. to DIN 46228, Part 4/09.90; blue



Item No.: 216-267
Ferrule; Sleeve for 4 mm² / AWG 12; insulated; electro-tin plated; electrolytic copper; gastight crimped; acc. to DIN 46228, Part 4/09.90; gray



Item No.: 216-208
Ferrule; Sleeve for 6 mm² / AWG 10; insulated; electro-tin plated; electrolytic copper; gastight crimped; acc. to DIN 46228, Part 4/09.90; yellow



Item No.: 216-108
Ferrule; Sleeve for 6 mm² / AWG 10; uninsulated; electro-tin plated; silver-colored

Installation Notes

Conductor termination

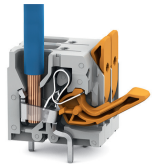

Insert fine-stranded conductors – and remove all conductors – via operating tool.

Conductor termination



Insert solid conductors via push-in termination.