Data Sheet | Item Number: 2606-1357

PCB terminal block; lever; 6 mm²; Pin spacing 12.5 mm; 7-pole; Push-in CAGE CLAMP®; 6,00 mm²; gray

https://www.wago.com/2606-1357



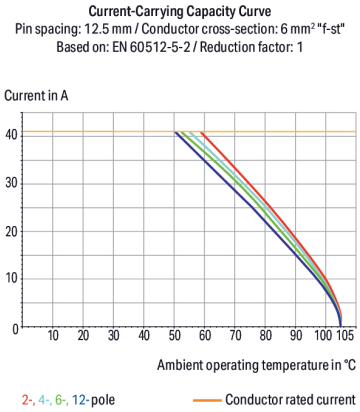

Color: gray

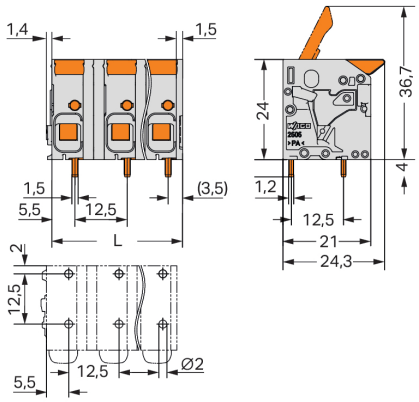

Dimensions in mm
L = (pole no. – 1) x pin spacing + 9 mm

PCB terminal block, 2606 Series, lever

Our PCB terminal block (item number 2606-1357) makes connections quick and easy. It offers the flexibility needed for different mounting types. Conductors should only be connected to this PCB terminal block if their strip length is between 11 and 13 mm . This product features one conductor terminal and utilizes Push-in CAGE CLAMP®. Push-in CAGE CLAMP® connection technology is ideal for connecting all conductor types. It allows direct insertion of both solid and fine-stranded conductors with ferrules without the need for tools—all thanks to its pluggable design. The item's dimensions are (84 x 28 x 24.3) mm (width x height x depth). This PCB terminal block is suitable for conductor cross sections ranging from 0.2 mm² to 10 mm².

The contact surface is coated with tin. This PCB terminal block is operated with a lever. THT is used to assemble the PCB terminal block. The conductor is designed to be inserted into the board at a 0° angle..

Notes

Variants:	Other pole numbers Direct marking Other colors Other versions (or variants) can be requested from WAGO Sales or configured at https://configurator.wago.com/.

Electrical data

Ratings per	IEC/EN 60664-1		
Overvoltage category	III	III	II
Pollution degree	3	2	2
Nominal voltage	800 V	1000 V	1000 V
Rated impulse withstand voltage	8 kV	8 kV	8 kV
Rated current	41 A	41 A	41 A

Approvals per	UL 1059		
Use group	B	C	D
Rated voltage	600 V	600 V	-
Rated current	42 A	42 A	-

Approvals per	CSA		
Use group	B	C	D
Rated voltage	600 V	600 V	-
Rated current	31 A	31 A	-

Connection Data

Clamping units	7
Total number of potentials	7
Number of connection types	1
Number of levels	1

Connection 1

Connection technology	Push-in CAGE CLAMP®
Actuation type	Lever
Solid conductor	0.2 … 10 mm² / 24 … 8 AWG
Fine-stranded conductor	0.2 … 10 mm² / 24 … 8 AWG
Fine-stranded conductor; with insulated ferrule	0.25 … 6 mm²
Fine-stranded conductor; with uninsulated ferrule	0.25 … 6 mm²
Fine-stranded conductor; with twin ferrule	0.25 … 2.5 mm²
Strip length	11 … 13 mm / 0.43 … 0.51 inches
Conductor connection direction to PCB	0 °
Pole number	7

Physical data

Pin spacing	12.5 mm / 0.492 inches
Width	84.0 mm / 3.307 inches
Height	28 mm / 1.102 inches
Height from the surface	24 mm / 0.945 inches
Depth	24.3 mm / 0.957 inches
Solder pin length	4 mm
Solder pin dimensions	1.5 x 1.2 mm
Drilled hole diameter	2 $^{(+0.1)}$ mm

Continued on next page

PCB contact

PCB contact	THT
Solder pin arrangement	over the entire terminal strip (in-line)
Number of solder pins per potential	2

Material data

Note (material data)	Information on material specifications can be found here
Color	gray
Material group	I
Insulation material (main housing)	Polyamide (PA66)
Flammability class per UL94	V0
Clamping spring material	Chrome-nickel spring steel (CrNi)
Contact material	Electrolytic copper (E_{Cu})
Contact Plating	Tin
Fire load	0.626 MJ
Actuator color	orange
Weight	37.1 g

Environmental requirements

Limit temperature range	-60 … +105 °C
Processing temperature	-35 … +60 °C
Continuous operating temperature	-60 … +105 °C

Environmental Testing

Test specification: Railway applications – Rolling stock – Electronic equipment	DIN EN 50155 (VDE 0115-200):2022-06
Test procedure: Railway applications – Rolling stock equipment – Vibration and shock tests	DIN EN 61373 (VDE 0115-0106):2011-04
Spectrum/Mounting location	Service life test, Category 1, Class A/B
Functional test with noise-like oscillations	Test passed according to Section 8 of the standard
Frequency	f_1 = 5 Hz to f_2 = 150 Hz
Acceleration	0.101g (highest test level used for all axes)
Test duration per axis	10 min.
Test directions	X, Y and Z axes
Monitoring of contact faults and interruptions	Passed
Voltage drop measurement before and after each axis	Passed
Simulated service life test through increased levels of noise-like oscillations	Test passed according to Section 9 of the standard
Frequency	f_1 = 5 Hz to f_2 = 150 Hz
Acceleration	0.572g (highest test level used for all axes)
Test duration per axis	5 h
Test directions	X, Y and Z axes
Extended testing: Monitoring of contact faults and interruptions	Passed
Extended testing: Voltage drop measurement before and after each axis	Passed
Shock test	Test passed according to Section 10 of the standard
Shock pulse form	Half sine
Acceleration	5g (highest test level used for all axes)
Shock duration	30 ms
Number of shocks (per axis)	3 pos. und 3 neg.
Test directions	X, Y and Z axes

Continued on next page

Environmental Testing

Extended testing: Monitoring of contact faults and interruptions	Passed
Extended testing: Voltage drop measurement before and after each axis	Passed
Vibration and shock stress for rolling stock equipment	Passed

Commercial data

PU (SPU)	18 pcs
Packaging type	Box
Country of origin	PL
GTIN	4066966392364
Customs tariff number	85369010000

Product Classification

UNSPSC	39121409
ETIM 9.0	EC002643
ETIM 10.0	EC002643
ECCN	NO US CLASSIFICATION

Environmental Product Compliance

RoHS Compliance Status	Compliant,No Exemption

Approvals / Certificates

General approvals

Approval	Standard	Certificate Name
CB DEKRA Certification B.V.	IEC 60947-7-4	NL-103311
CSA CSA Group	C22.2	70146882
UL Underwriters Laboratories Inc.	UL 1059	UL-US-L45172-6187172-92117102-1

Declarations of conformity and manufacturer's declarations

Approval	Standard	Certificate Name
Railway WAGO GmbH & Co. KG	-	Z00004412.000

Downloads

Environmental Product Compliance

Compliance Search

Environmental Product Compliance 2606-1357

Documentation

Additional Information

Technical Section	03.04.2019	pdf 2027.26 KB

CAD/CAE-Data

CAD data

2D/3D Models
2606-1357

CAE data

ZUKEN Portal
2606-1357

PCB Design

Symbol and Footprint
via SamacSys
2606-1357

Symbol and Footprint
via Ultra Librarian
2606-1357

1 Compatible Products

1.1 Optional Accessories

1.1.1 Ferrule

1.1.1.1 Ferrule

Item No.: 216-263
Ferrule; Sleeve for 1 mm² / AWG 18; insulated; electro-tin plated; electrolytic copper; gastight crimped; acc. to DIN 46228, Part 4/09.90; red



Item No.: 216-264
Ferrule; Sleeve for 1.5 mm² / AWG 16; insulated; electro-tin plated; electrolytic copper; gastight crimped; acc. to DIN 46228, Part 4/09.90; black



Item No.: 216-266
Ferrule; Sleeve for 2.5 mm² / AWG 14; insulated; electro-tin plated; electrolytic copper; gastight crimped; acc. to DIN 46228, Part 4/09.90; blue



Item No.: 216-267
Ferrule; Sleeve for 4 mm² / AWG 12; insulated; electro-tin plated; electrolytic copper; gastight crimped; acc. to DIN 46228, Part 4/09.90; gray



Item No.: 216-208
Ferrule; Sleeve for 6 mm² / AWG 10; insulated; electro-tin plated; electrolytic copper; gastight crimped; acc. to DIN 46228, Part 4/09.90; yellow



Item No.: 216-108
Ferrule; Sleeve for 6 mm² / AWG 10; uninsulated; electro-tin plated; silver-colored

Installation Notes

Conductor termination

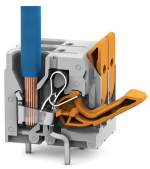

Insert fine-stranded conductors – and remove all conductors – via operating tool.

Conductor termination

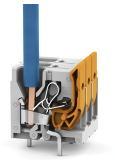

Insert solid conductors via push-in termination.