Data Sheet | Item Number: 2616-1103/010-000

PCB terminal block; lever; 16 mm²; Pin spacing 10 mm; 3-pole; Push-in CAGE CLAMP®; gray

https://www.wago.com/2616-1103/010-000

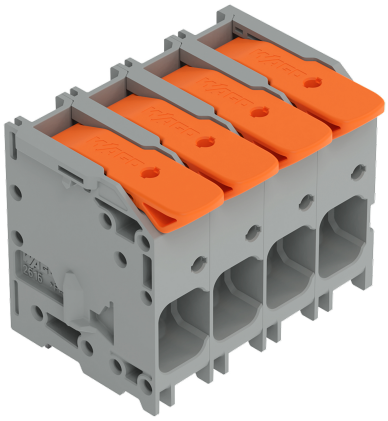

Color: gray

Similar to illustration

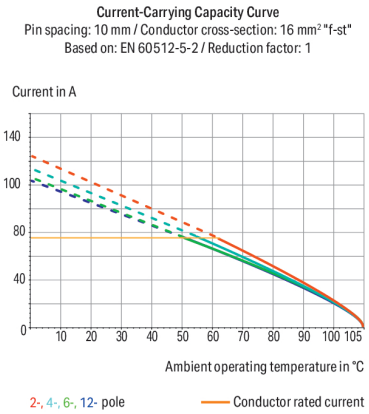

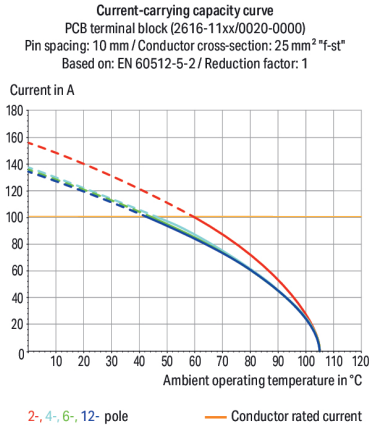

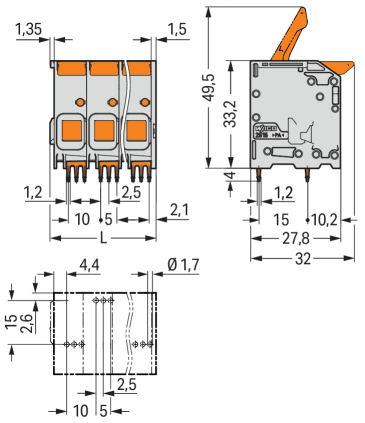

Dimensions in mm
L = (pole no. – 1) x pin spacing + 12.8 mm

PCB terminal block, 2616 Series, solder pin dimensions 1.2 x 1.2 mm

This PCB terminal block (item number 2616-1103/010-000) is designed to connect conductors quickly and easily. It is perfect for custom installations with different mounting types. Strip lengths must be between 18 and 20 mm when connecting conductors to this PCB terminal block. Featuring one conductor terminal along with Push-in CAGE CLAMP®, this connector outperforms the competition. Push-in CAGE CLAMP® connection technology is ideal for connecting all conductor types. Solid and fine-stranded conductors with ferrules can be inserted without the need for tools—all thanks to its pluggable design. The dimensions are (32.8 x 37.2 x 32) mm (width x height x depth). Depending on the type of conductor, this PCB terminal block is designed for conductor cross sections ranging from 0.75 mm² to 16 mm². The contact surface is coated with tin. A lever is used to operate this PCB terminal block. THT is used to assemble the PCB terminal block. The conductor is designed to be inserted into the board at an angle of 0°..

Notes

General safety information	**NOTICE: Observe installation and safety instructions!** **To be sold only with installation instructions!**
Variants:	Other pole numbers Direct marking Other colors Other versions (or variants) can be requested from WAGO Sales or configured at https://configurator.wago.com/.

Electrical data

Ratings per	IEC/EN 60664-1		
Overvoltage category	III	III	II
Pollution degree	3	2	2
Nominal voltage	1000 V	1000 V	1000 V
Rated impulse withstand voltage	8 kV	8 kV	8 kV
Rated current	76 A	76 A	76 A

Approvals per	UL 1059		
Use group	B	C	D
Rated voltage	600 V	600 V	-
Rated current	66 A	66 A	-

Approvals per	CSA		
Use group	B	C	D
Rated voltage	600 V	600 V	-
Rated current	66 A	66 A	-

Connection Data

Clamping units	3
Total number of potentials	3
Number of connection types	1
Number of levels	1

Connection 1

Connection technology	Push-in CAGE CLAMP®
Actuation type	Lever
Solid conductor	0.75 … 16 mm² / 18 … 4 AWG
Fine-stranded conductor	0.75 … 25 mm² / 18 … 4 AWG
Fine-stranded conductor; with insulated ferrule	0.75 … 16 mm²
Fine-stranded conductor; with uninsulated ferrule	0.75 … 16 mm²
Fine-stranded conductor; with twin ferrule	0.75 … 6 mm²
Strip length	18 … 20 mm / 0.71 … 0.79 inches
Conductor connection direction to PCB	0 °
Pole number	3

Physical data

Pin spacing	10 mm / 0.394 inches
Width	32.8 mm / 1.291 inches
Height	37.2 mm / 1.465 inches
Height from the surface	33.2 mm / 1.307 inches
Depth	32 mm / 1.26 inches
Solder pin length	4 mm
Solder pin dimensions	1.2 x 1.2 mm
Drilled hole diameter	1.7 $^{(+0.1)}$ mm

Continued on next page

PCB contact

PCB contact	THT
Solder pin arrangement	over the entire terminal strip (staggered)
Number of solder pins per potential	3

Material data

Note (material data)	Information on material specifications can be found here
Color	gray
Material group	I
Insulation material (main housing)	Polyamide (PA66)
Flammability class per UL94	V0
Clamping spring material	Chrome-nickel spring steel (CrNi)
Contact material	Electrolytic copper (E_{Cu})
Contact Plating	Tin
Fire load	0.344 MJ
Actuator color	orange
Weight	28.5 g

Environmental requirements

Limit temperature range	-60 … +105 °C
Processing temperature	-35 … +60 °C

Commercial data

PU (SPU)	40 pcs
Packaging type	Box
Country of origin	DE
GTIN	4055143869607
Customs tariff number	85369010000

Product Classification

UNSPSC	39121409
ETIM 9.0	EC002643
ETIM 10.0	EC002643
ECCN	NO US CLASSIFICATION

Environmental Product Compliance

RoHS Compliance Status	Compliant,No Exemption

Approvals / Certificates

General approvals

Approval	Standard	Certificate Name
CSA DEKRA Certification B.V.	C22.2	70154737
DEKRA DEKRA Certification B.V.	EN 60947-7-4	71-148282

Continued on next page

Downloads

Environmental Product Compliance

Compliance Search

Environmental Product Compliance
2616-1103/010-000

Documentation

Safety Data Sheet

Handling and Safety Instructions of PCB Terminal Blocks with Push-In Cage Clamp — pdf, 393.90 KB

Additional Information

Technical Section — 03.04.2019 — pdf, 2027.26 KB

CAD/CAE-Data

CAD data

2D/3D Models
2616-1103/010-000

PCB Design

Symbol and Footprint via SamacSys
2616-1103/010-000

Symbol and Footprint via Ultra Librarian
2616-1103/010-000

1 Compatible Products

1.1 Optional Accessories

1.1.1 Ferrule

1.1.1.1 Ferrule



Item No.: 216-284
Ferrule; Sleeve for 1.5 mm² / AWG 16; insulated; electro-tin plated; electrolytic copper; gastight crimped; acc. to DIN 46228, Part 4/09.90; black



Item No.: 216-289
Ferrule; Sleeve for 10 mm² / AWG 8; insulated; electro-tin plated; electrolytic copper; gastight crimped; acc. to DIN 46228, Part 4/09.90; red



Item No.: 216-210
Ferrule; Sleeve for 16 mm² / AWG 6; insulated; electro-tin plated; electrolytic copper; gastight crimped; acc. to DIN 46228, Part 4/09.90; blue



Item No.: 216-286
Ferrule; Sleeve for 2.5 mm² / AWG 14; insulated; electro-tin plated; electrolytic copper; gastight crimped; acc. to DIN 46228, Part 4/09.90; blue



Item No.: 216-287
Ferrule; Sleeve for 4 mm² / AWG 12; insulated; electro-tin plated; electrolytic copper; gastight crimped; acc. to DIN 46228, Part 4/09.90; gray



Item No.: 216-288
Ferrule; Sleeve for 6 mm² / AWG 10; insulated; electro-tin plated; electrolytic copper; gastight crimped; acc. to DIN 46228, Part 4/09.90; yellow

Continued on next page

1.1.2 Jumper

1.1.2.1 Jumper



Item No.: 2616-902
Jumper; for conductor entry; 2-way; insulated; gray

Installation Notes

Conductor termination

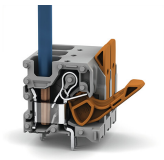

Insert fine-stranded conductors – and remove all conductors – via operating tool.

Conductor termination

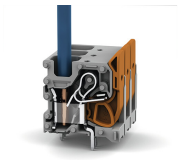

Insert solid conductors via push-in termination.