Data Sheet | Item Number: 2616-3103/020-000

PCB terminal block; lever; 16 mm²; Pin spacing 10 mm; 3-pole; Push-in CAGE CLAMP®; gray

https://www.wago.com/2616-3103/020-000

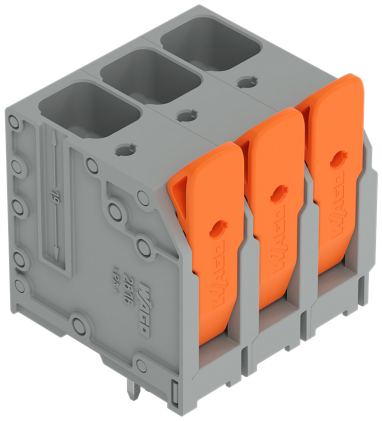

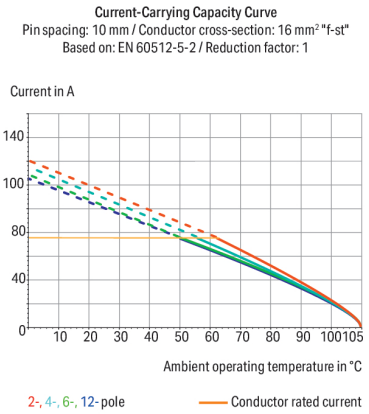

Color: gray

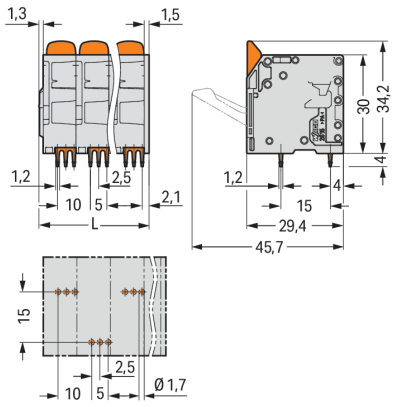

Dimensions in mm
L = (pole no. – 1) x pin spacing + 11.5 mm

PCB terminal block, 2616 Series, Push-in CAGE CLAMP®

Connect conductors quickly and easily with this PCB terminal block (item number 2616-3103/020-000). It is a universal connector that can be used practically anywhere, e.g., as a pluggable PCB connector, panel feedthrough header, connector for rail-mount terminal blocks, or a floating connector for different mounting methods. Conductors can only be connected to this PCB terminal block if their strip length is between 18 and 20 mm . This product features one conductor terminal and utilizes Push-in CAGE CLAMP®. Push-in CAGE CLAMP® connection technology is ideal for connecting all conductor types. Both solid and fine-stranded conductors with ferrules can be inserted without needing to use any tools—all thanks to its pluggable design. The item's dimensions are (32.8 x 38.2 x 29.4) mm (width x height x depth). Depending on the type of conductor, this PCB terminal block is designed for conductor cross sections ranging from 0.75 mm² to 16 mm². The contact surface is coated with tin. A lever is used to operate this PCB terminal block. The PCB terminal block is designed for THT soldering. Insert the conductor at a 90° angle..

Notes

Variants:	Other pole numbers Direct marking Other colors Other versions (or variants) can be requested from WAGO Sales or configured at https://configurator.wago.com/.

Electrical data

Ratings per	IEC/EN 60664-1		
Overvoltage category	III	III	II
Pollution degree	3	2	2
Nominal voltage	1000 V	1000 V	1000 V
Rated impulse withstand voltage	8 kV	8 kV	8 kV
Rated current	76 A	76 A	76 A

Approvals per	UL 1059		
Use group	B	C	D
Rated voltage	600 V	600 V	-
Rated current	66 A	66 A	-

Approvals per	CSA		
Use group	B	C	D
Rated voltage	600 V	600 V	-
Rated current	66 A	66 A	-

Connection Data

Clamping units	3
Total number of potentials	3
Number of connection types	1
Number of levels	1

Connection 1

Connection technology	Push-in CAGE CLAMP®
Actuation type	Lever
Solid conductor	0.75 … 16 mm² / 18 … 4 AWG
Fine-stranded conductor	0.75 … 25 mm² / 18 … 4 AWG
Fine-stranded conductor; with insulated ferrule	0.75 … 16 mm²
Fine-stranded conductor; with uninsulated ferrule	0.75 … 16 mm²
Fine-stranded conductor; with twin ferrule	0.75 … 6 mm²
Strip length	18 … 20 mm / 0.71 … 0.79 inches
Conductor connection direction to PCB	90 °
Pole number	3

Physical data

Pin spacing	10 mm / 0.394 inches
Width	32.8 mm / 1.291 inches
Height	38.2 mm / 1.504 inches
Height from the surface	34.2 mm / 1.346 inches
Depth	29.4 mm / 1.157 inches
Solder pin length	4 mm
Solder pin dimensions	1.2 x 1.2 mm
Drilled hole diameter	1.7 $^{(+0.1)}$ mm

Continued on next page

PCB contact

PCB contact	THT
Solder pin arrangement	over the entire terminal strip (staggered)
Number of solder pins per potential	3

Material data

Note (material data)	Information on material specifications can be found here
Color	gray
Material group	I
Insulation material (main housing)	Polyamide (PA66)
Flammability class per UL94	V0
Clamping spring material	Chrome-nickel spring steel (CrNi)
Contact material	Electrolytic copper (E_{Cu})
Contact Plating	Tin
Fire load	0.334 MJ
Actuator color	orange
Weight	28.1 g

Environmental requirements

Limit temperature range	-60 … +105 °C
Processing temperature	-35 … +60 °C

Commercial data

PU (SPU)	36 pcs
Packaging type	Box
Country of origin	PL
GTIN	4066966483994
Customs tariff number	85369010000

Product Classification

UNSPSC	39121409
eCl@ss 10.0	27-44-04-01
eCl@ss 9.0	27-44-04-01
ETIM 9.0	EC002643
ETIM 10.0	EC002643
ECCN	NO US CLASSIFICATION

Environmental Product Compliance

RoHS Compliance Status	Compliant,No Exemption

Continued on next page

Approvals / Certificates

General approvals

Approval	Standard	Certificate Name
CB DEKRA Certification B.V.	EN 60947-7-4	NL-61617
CSA DEKRA Certification B.V.	C22.2	70154737
DEKRA DEKRA Certification B.V.	EN 60947-7-4	71-148282
KEMA/KEUR DEKRA Certification B.V.	EN 60947-7-4	71-110774
UL Underwriters Laboratories Inc.	C22.2 No. 158	UL-US-L45172-6187173-60217102-1

Downloads

Environmental Product Compliance

Compliance Search

Environmental Product Compliance
2616-3103/020-000

Documentation

Additional Information

Technical Section	03.04.2019	pdf 2027.26 KB

CAD/CAE-Data

CAD data

2D/3D Models
2616-3103/020-000

CAE data

ZUKEN Portal
2616-3103/020-000

PCB Design

Symbol and Footprint via SamacSys
2616-3103/020-000

Symbol and Footprint via Ultra Librarian
2616-3103/020-000

Continued on next page

1 Compatible Products

1.1 Optional Accessories

1.1.1 Ferrule

1.1.1.1 Ferrule



Item No.: 216-284
Ferrule; Sleeve for 1.5 mm² / AWG 16; insulated; electro-tin plated; electrolytic copper; gastight crimped; acc. to DIN 46228, Part 4/09.90; black



Item No.: 216-289
Ferrule; Sleeve for 10 mm² / AWG 8; insulated; electro-tin plated; electrolytic copper; gastight crimped; acc. to DIN 46228, Part 4/09.90; red



Item No.: 216-210
Ferrule; Sleeve for 16 mm² / AWG 6; insulated; electro-tin plated; electrolytic copper; gastight crimped; acc. to DIN 46228, Part 4/09.90; blue



Item No.: 216-286
Ferrule; Sleeve for 2.5 mm² / AWG 14; insulated; electro-tin plated; electrolytic copper; gastight crimped; acc. to DIN 46228, Part 4/09.90; blue



Item No.: 216-287
Ferrule; Sleeve for 4 mm² / AWG 12; insulated; electro-tin plated; electrolytic copper; gastight crimped; acc. to DIN 46228, Part 4/09.90; gray



Item No.: 216-288
Ferrule; Sleeve for 6 mm² / AWG 10; insulated; electro-tin plated; electrolytic copper; gastight crimped; acc. to DIN 46228, Part 4/09.90; yellow

1.1.2 Jumper

1.1.2.1 Jumper



Item No.: 2616-902
Jumper; for conductor entry; 2-way; insulated; gray

Installation Notes

Conductor termination

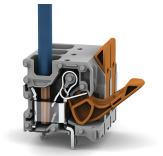

Insert fine-stranded conductors – and remove all conductors – via operating tool.

Conductor termination

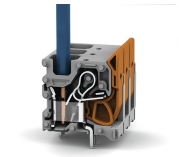

Insert solid conductors via push-in termination.