Data Sheet | Item Number: 262-287

4-conductor terminal strip; without push-buttons; suitable for Ex e II applications; with snap-in mounting feet; 7-pole; for plate thickness 0.6 - 1.2 mm; Fixing hole 3.5 mm Ø; 4 mm²; CAGE CLAMP®; 4,00 mm²; light gray

https://www.wago.com/262-287

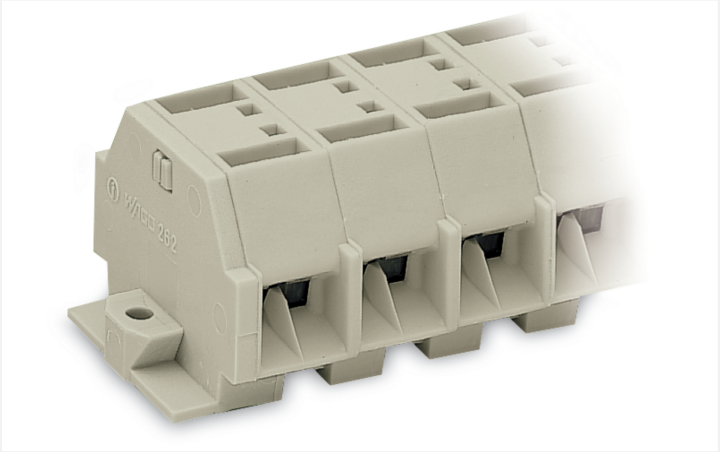

Color: light gray

Similar to illustration

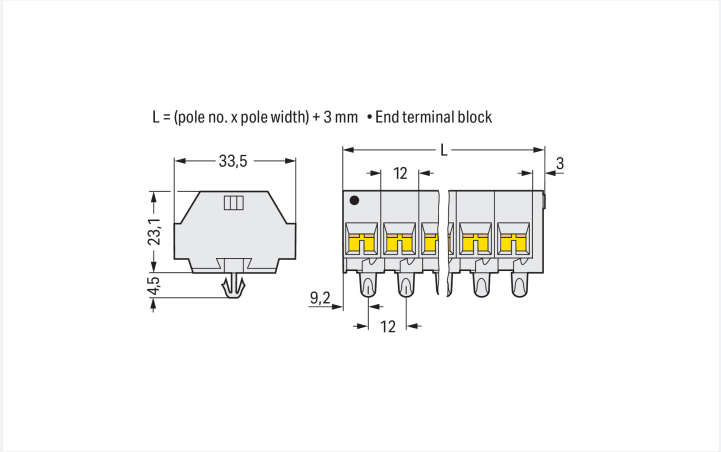

Dimensions in mm

Through terminal block, 262 Series, CAGE CLAMP®

This through terminal block (item number 262-287) is designed to connect conductors quickly and easily. Conductors should only be connected to this through terminal block if their strip length is between 9 and 10 mm . Our mini rail-mount terminal blocks are perfect for tight spaces thanks to their compact design. You can also choose from a range of mounting and actuation variants for unparalleled flexibility, making it easy to select the ideal mini terminal block for each use. This product features conductor terminals and utilizes CAGE CLAMP®. Our highly-rated and maintenance-free CAGE CLAMP® connection makes it easy to connect all types of conductors without having to prepare the conductor. For example, you don't need to crimp ferrules. The item's dimensions are (87 x 33.5 x 27.5) mm (width x height x depth). Depending on the type of conductor, this through terminal block is suitable for conductor cross sections ranging from 0.5 mm² to 4 mm².

An operating tool is used to operate this mini rail-mount terminal block.

Electrical data

Ex information

Reference to hazardous areas	See “Downloads – Documentation – Additional Information: Technical Section; Technical Explications”
Rated voltage EN (Ex e II)	550 V
Rated current (Ex e II)	30 A

General information

Wiring direction	Side-entry wiring

Connection Data

Clamping units	28
Total number of potentials	7
Number of levels	1

Connection 1

Connection technology	CAGE CLAMP®
Actuation type	Operating tool
Connectable conductor materials	Copper
Solid conductor	0.5 … 4 mm² / 20 … 12 AWG
Fine-stranded conductor	0.5 … 4 mm² / 20 … 12 AWG
Strip length	9 … 10 mm / 0.35 … 0.39 inches

Continued on next page

Connection 1

Pole number	7
Wiring direction	Side-entry wiring

Physical data

Width	87 mm / 3.425 inches
Height	33.5 mm / 1.319 inches
Height from the surface	23 mm / 0.909 inches
Depth	27.5 mm / 1.083 inches
Module width	12 mm / 0.472 inches

Mechanical data

Design	horizontal type
Mounting type	Snap-in foot
Marking level	Side marking

Material data

Note (material data)	Information on material specifications can be found here
Color	light gray
Material group	I
Insulation material (main housing)	Polyamide (PA66)
Flammability class per UL94	V0
Fire load	0.749 MJ
Halogen-free	Yes
Weight	51 g

Environmental requirements

Processing temperature	-35 … +85 °C
Continuous operating temperature	-60 … +105 °C

Commercial data

PU (SPU)	50 pcs
Packaging type	Box
Country of origin	DE
GTIN	4044918639217
Customs tariff number	85369010000

Product Classification

UNSPSC	39121410
eCl@ss 10.0	27-14-11-06
eCl@ss 9.0	27-14-11-06
ETIM 9.0	EC001284
ETIM 10.0	EC001284
ECCN	NO US CLASSIFICATION

Continued on next page

Environmental Product Compliance

RoHS Compliance Status	Compliant,No Exemption

Approvals / Certificates

General approvals

Approval	Standard	Certificate Name
CSA DEKRA Certification B.V.	C22.2	70010891
UR Underwriters Laboratories Inc.	UL 1059	E45172

Declarations of conformity and manufacturer's declarations

Approval	Standard	Certificate Name
ATEX-Attestation of Conformity WAGO GmbH & Co. KG	-	-

Approvals for hazardous areas

Approval	Standard	Certificate Name
AEx UL International Germany GmbH c/o Physikalisch Technische Bundesanstalt	UL 60079	E185892 (AEx e II resp. Ex e II)
ATEX Physikalisch Technische Bundesanstalt (PTB)	EN 60079	PTB 98 ATEX 3125 U (II 2 G Ex eb IIC Gb bzw. I M 2 Ex eb I Mb)
CCC CNEX	GB/T 3836.3	2020312313000186 (Ex eb IIC Gb, Ex eb I Mb)
IECEx Physikalisch Technische Bundesanstalt (PTB)	IEC 60079	IECEx PTB 04.0004U (Ex eb IIC Gb or Ex eb I Mb)
INMETRO TÜV Rheinland do Brasil Ltda.	IEC 60079	TÜV 12.1298 U

Downloads

Environmental Product Compliance

Compliance Search

Environmental Product Compliance 262-287

Continued on next page

Documentation

Bid Text

262-287	19.02.2019	xml 3.10 KB
262-287	17.08.2017	doc 24.50 KB

CAD/CAE-Data

CAD data

2D/3D Models 262-287

CAE data

EPLAN Data Portal 262-287

WSCAD Universe 262-287

ZUKEN Portal 262-287

1 Compatible Products

1.1 Optional Accessories

1.1.1 DIN-rail

1.1.1.1 Mounting accessories



Item No.: 210-154
Aluminum carrier rail; 1000 mm long; 18 mm wide; 7 mm high; silver-colored

1.1.2 Ferrule

1.1.2.1 Ferrule

Item No.: 216-241
Ferrule; Sleeve for 0.5 mm² / 20 AWG; insulated; electro-tin plated; electrolytic copper; gastight crimped; acc. to DIN 46228, Part 4/09.90; white

Item No.: 216-141
Ferrule; Sleeve for 0.5 mm² / 20 AWG; uninsulated; electro-tin plated; electrolytic copper; gastight crimped; acc. to DIN 46228, Part 1/08.92

Item No.: 216-242
Ferrule; Sleeve for 0.75 mm² / 18 AWG; insulated; electro-tin plated; electrolytic copper; gastight crimped; acc. to DIN 46228, Part 4/09.90; gray

Item No.: 216-142
Ferrule; Sleeve for 0.75 mm² / 18 AWG; uninsulated; electro-tin plated; electrolytic copper; gastight crimped; acc. to DIN 46228, Part 1/08.92

Item No.: 216-243
Ferrule; Sleeve for 1 mm² / AWG 18; insulated; electro-tin plated; electrolytic copper; gastight crimped; acc. to DIN 46228, Part 4/09.90; red

Item No.: 216-143
Ferrule; Sleeve for 1 mm² / AWG 18; uninsulated; electro-tin plated; electrolytic copper; gastight crimped; acc. to DIN 46228, Part 1/08.92



Item No.: 216-244
Ferrule; Sleeve for 1.5 mm² / AWG 16; insulated; electro-tin plated; electrolytic copper; gastight crimped; acc. to DIN 46228, Part 4/09.90; black

Item No.: 216-144
Ferrule; Sleeve for 1.5 mm² / AWG 16; uninsulated; electro-tin plated; electrolytic copper; gastight crimped; acc. to DIN 46228, Part 1/08.92; silver-colored



Item No.: 216-246
Ferrule; Sleeve for 2.5 mm² / AWG 14; insulated; electro-tin plated; electrolytic copper; gastight crimped; acc. to DIN 46228, Part 4/09.90; blue

1.1.3 Installation

1.1.3.1 Mounting accessories

Item No.: 209-137
Mounting adapter; can be used as end stop; 6.5 mm wide; gray



Item No.: 209-120
Mounting foot; can be snapped on terminal blocks with snap-in mounting foot; for mounting on relay-modules; 6.4 mm wide; gray

1.1.4 Jumper

1.1.4.1 Jumper



Item No.: 262-402
Jumper; for conductor entry; 2-way; insulated; gray

1.1.5 Marking

1.1.5.1 Marking strip



Item No.: 210-833
Marking strips; 25 m on roll; 6 mm wide; plain; Self-adhesive; white

1.1.6 Tool

1.1.6.1 Operating tool



Item No.: 210-658
Operating tool; Blade: 3.5 x 0.5 mm; with a partially insulated shaft; angled; short; multicoloured



Item No.: 210-720
Operating tool; Blade: 3.5 x 0.5 mm; with a partially insulated shaft; multicoloured



Item No.: 210-657
Operating tool; Blade: 3.5 x 0.5 mm; with a partially insulated shaft; short; multicoloured

Installation Notes

Conductor termination

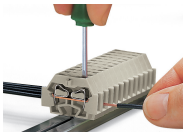

CAGE CLAMP® connection
Inserting a conductor.

Continued on next page

Commoning

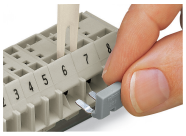

Commoning with comb-style jumper bar.

Installation



Mounting a terminal strip with snap-in feet into holes.



Mounting a terminal strip with snap-in feet onto aluminum rail.

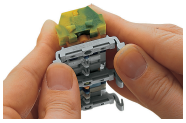

Terminal strip with snap-in mounting feet Snapping a mounting foot (209-120). (Distance between mounting feet: approx. 25 … 30 mm)

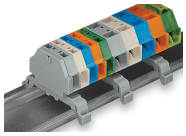

Terminal strip; with snap-in mounting feet; for DIN-35 rail



Terminal strip with snap-in mounting feet, for 0.6 … 1.2 mm plate thickness, 3.5 mm mounting hole diameter (also for 210-154 Aluminum Rail or with 209-120 Mounting Foot for DIN-35 rail)

Marking



Marking with self-adhesive marking strips.



Marking by direct printing (upon request).