Data Sheet | Item Number: 2624-3311

PCB terminal block; 4 mm²; Pin spacing 7.5 mm; 11-pole; Push-in CAGE CLAMP®; gray

https://www.wago.com/2624-3311

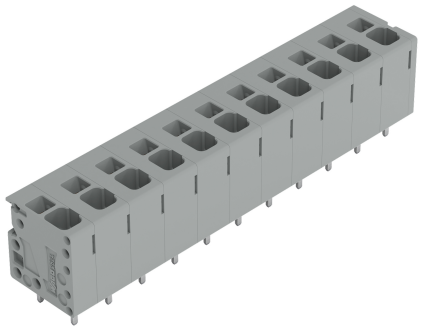

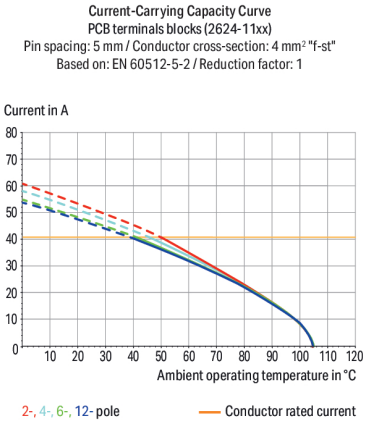

Color: gray

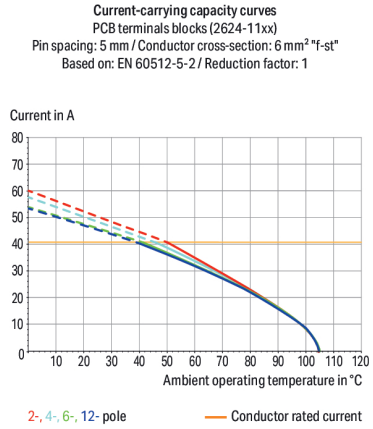

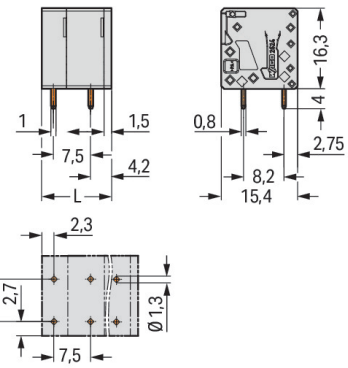

Dimensions in mm
L = (pole no. – 1) x pin spacing + 6.5 mm

PCB terminal block, 2624 Series, operating tool

This PCB terminal block (item number 2624-3311) streamlines wire connections, making them both quick and easy. It offers the flexibility needed for different mounting types. Conductors should only be connected to this PCB terminal block if their strip length is between 10 and 12 mm . This product features one conductor terminal and utilizes Push-in CAGE CLAMP®. Push-in CAGE CLAMP® technology provides a universal connection solution for any type of conductor. It allows both solid and fine-stranded conductors with ferrules to be inserted directly into the clamping point without the need for tools. Dimensions: (81.5 x 20.3 x 16.3) mm (width x height x depth). Depending on the type of conductor, this PCB terminal block is ideal for conductor cross sections ranging from 0.2 mm² to 6 mm². The contact surface is coated with tin. This PCB terminal block is operated with an operating tool. THT is used to solder the PCB terminal block. Insert the conductor at a 90° angle..

Notes

Variants:	Other pole numbers Direct marking Other colors Other versions (or variants) can be requested from WAGO Sales or configured at https://configurator.wago.com/.

Electrical data

Ratings per	IEC/EN 60664-1		
Overvoltage category	III	III	II
Pollution degree	3	2	2
Nominal voltage	630 V	1000 V	1000 V
Rated impulse withstand voltage	6 kV	6 kV	6 kV
Rated current	41 A	41 A	41 A

Approvals per	UL 1059		
Use group	B	C	D
Rated voltage	300 V	150 V	300 V
Rated current	26 A	26 A	10 A

Approvals per	CSA		
Use group	B	C	D
Rated voltage	300 V	-	300 V
Rated current	26 A	-	5 A

Connection Data

Clamping units	11
Total number of potentials	11
Number of connection types	1
Number of levels	1

Connection 1

Connection technology	Push-in CAGE CLAMP®
Actuation type	Operating tool
Solid conductor	0.2 … 6 mm² / 24 … 10 AWG
Fine-stranded conductor	0.2 … 6 mm² / 24 … 10 AWG
Fine-stranded conductor; with insulated ferrule	0.25 … 2.5 mm²
Fine-stranded conductor; with uninsulated ferrule	0.25 … 2.5 mm²
Fine-stranded conductor; with twin ferrule	0.25 … 1.5 mm²
Strip length	10 … 12 mm / 0.39 … 0.47 inches
Conductor connection direction to PCB	90 °
Pole number	11

Physical data

Pin spacing	7.5 mm / 0.295 inches
Width	81.5 mm / 3.209 inches
Height	20.3 mm / 0.799 inches
Height from the surface	16.3 mm / 0.642 inches
Depth	16.3 mm / 0.642 inches
Solder pin length	4 mm
Solder pin dimensions	0.8 x 1 mm
Drilled hole diameter	1.3 $^{(+0.1)}$ mm

Continued on next page

Mechanical data

Mounting type	Feed-through mounting
Suitable for through-panel applications	Yes

PCB contact

PCB contact	THT
Solder pin arrangement	over the entire terminal strip (in-line)
Number of solder pins per potential	2

Material data

Note (material data)	Information on material specifications can be found here
Color	gray
Material group	I
Insulation material (main housing)	Polyamide (PA66)
Flammability class per UL94	V0
Clamping spring material	Chrome-nickel spring steel (CrNi)
Contact material	Electrolytic copper (E_{Cu})
Contact Plating	Tin
Fire load	0.285 MJ
Weight	20.7 g

Environmental requirements

Limit temperature range	-60 … +105 °C
Processing temperature	-35 … +60 °C
Continuous operating temperature	-60 … +105 °C

Commercial data

PU (SPU)	20 pcs
Packaging type	Box
Country of origin	PL
GTIN	4066966487428
Customs tariff number	85369010000

Product Classification

UNSPSC	39121409
eCl@ss 10.0	27-44-04-01
eCl@ss 9.0	27-44-04-01
ETIM 9.0	EC002643
ETIM 10.0	EC002643
ECCN	NO US CLASSIFICATION

Continued on next page

Environmental Product Compliance

RoHS Compliance Status	Compliant,No Exemption

Approvals / Certificates

General approvals

Approval	Standard	Certificate Name
CB DEKRA Certification B.V.	IEC 60947-7-4	NL-61583
CSA DEKRA Certification B.V.	C22.2 No. 158	70117145
cURus Underwriters Laboratories Inc.	UL 1059	E45172
KEMA/KEUR DEKRA Certification B.V.	EN 60947-7-4	71-100535

Downloads

Environmental Product Compliance

Compliance Search

Environmental Product Compliance 2624-3311

Documentation

Additional Information

Technical Section	03.04.2019	pdf 2027.26 KB

CAD/CAE-Data

CAD data

2D/3D Models 2624-3311

CAE data

ZUKEN Portal 2624-3311

PCB Design

Symbol and Footprint via SamacSys 2624-3311

Symbol and Footprint via Ultra Librarian 2624-3311

1 Compatible Products

1.1 Optional Accessories

1.1.1 Ferrule

1.1.1.1 Ferrule

Item No.: 216-241
Ferrule; Sleeve for 0.5 mm² / 20 AWG; insulated; electro-tin plated; electrolytic copper; gastight crimped; acc. to DIN 46228, Part 4/09.90; white

Item No.: 216-242
Ferrule; Sleeve for 0.75 mm² / 18 AWG; insulated; electro-tin plated; electrolytic copper; gastight crimped; acc. to DIN 46228, Part 4/09.90; gray

Item No.: 216-262
Ferrule; Sleeve for 0.75 mm² / 18 AWG; insulated; electro-tin plated; electrolytic copper; gastight crimped; acc. to DIN 46228, Part 4/09.90; gray

Item No.: 216-243
Ferrule; Sleeve for 1 mm² / AWG 18; insulated; electro-tin plated; electrolytic copper; gastight crimped; acc. to DIN 46228, Part 4/09.90; red

Item No.: 216-263
Ferrule; Sleeve for 1 mm² / AWG 18; insulated; electro-tin plated; electrolytic copper; gastight crimped; acc. to DIN 46228, Part 4/09.90; red



Item No.: 216-244
Ferrule; Sleeve for 1.5 mm² / AWG 16; insulated; electro-tin plated; electrolytic copper; gastight crimped; acc. to DIN 46228, Part 4/09.90; black



Item No.: 216-264
Ferrule; Sleeve for 1.5 mm² / AWG 16; insulated; electro-tin plated; electrolytic copper; gastight crimped; acc. to DIN 46228, Part 4/09.90; black



Item No.: 216-246
Ferrule; Sleeve for 2.5 mm² / AWG 14; insulated; electro-tin plated; electrolytic copper; gastight crimped; acc. to DIN 46228, Part 4/09.90; blue



Item No.: 216-266
Ferrule; Sleeve for 2.5 mm² / AWG 14; insulated; electro-tin plated; electrolytic copper; gastight crimped; acc. to DIN 46228, Part 4/09.90; blue



Item No.: 216-106
Ferrule; Sleeve for 2.5 mm² / AWG 14; uninsulated; electro-tin plated; silver-colored

1.1.2 Tool

1.1.2.1 Operating tool



Item No.: 210-720
Operating tool; Blade: 3.5 x 0.5 mm; with a partially insulated shaft; multicoloured

Installation Notes

Conductor termination



Insert fine-stranded conductors and remove all conductor types via operating tool.

Conductor termination



Insert solid conductors via push-in termination.

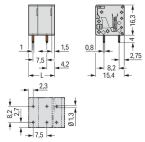

L = (pole no. – 1) x pin spacing + 6.5 mm