Data Sheet | Item Number: 2626-1103/020-000

PCB terminal block; 6 mm²; Pin spacing 7.5 mm; 3-pole; Push-in CAGE CLAMP®; 6,00 mm²; gray

https://www.wago.com/2626-1103/020-000

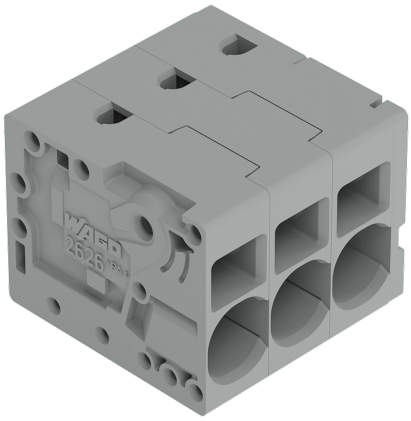

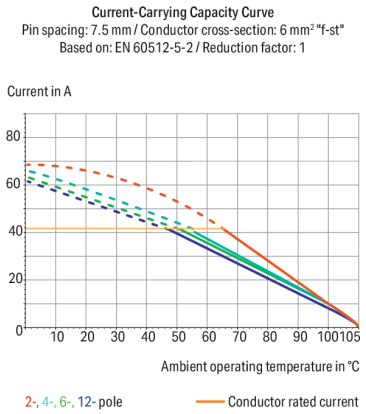

Color: gray

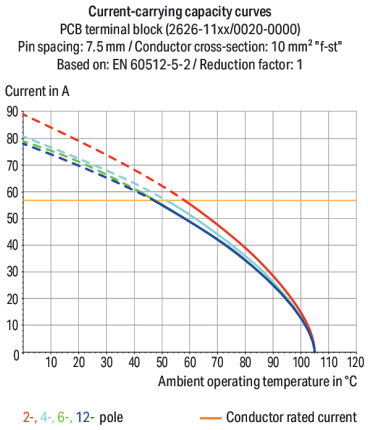

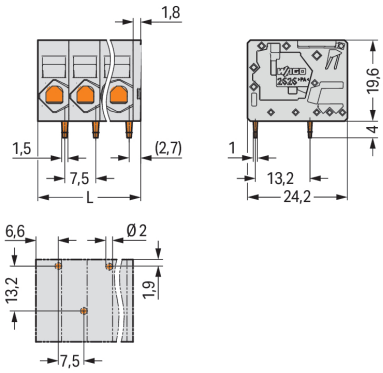

Dimensions in mm
L = (pole no. – 1) x pin spacing + 9.3 mm

PCB terminal block, 2626 Series, operating tool

This PCB terminal block (item number 2626-1103/020-000) is designed for simple and secure connections. You can count on tried and tested safety with these PCB terminal blocks, perfect for a host of applications when designing your devices. Strip lengths must be between 13 and 15 mm when connecting conductors to this PCB terminal block. Featuring one conductor terminal along with Push-in CAGE CLAMP®, this connector is highly versatile. Push-in CAGE CLAMP® technology provides a universal connection solution for any type of conductor. It allows both solid and fine-stranded conductors with ferrules to be inserted directly into the clamping point without the need for tools. The item's dimensions are (24.3 x 23.6 x 24.2) mm (width x height x depth). Depending on the conductor type, this PCB terminal block is suitable for conductor cross sections ranging from 0.2 mm² to 10 mm².

Push-in CAGE CLAMP® spring pressure connection – for reliable installations instead of time-consuming screw connections

The contact surface is tin-coated This PCB terminal block is operated with an operating tool. The PCB terminal block is designed for THT soldering. The conductor is designed to be inserted at an angle of 0°..

- Number of poles: 3
- Actuation via operating tool
- Reliable soldering thanks to THT
- Also suitable for enclosure feedthrough
- Permanently secure connections

Notes

General safety information	**NOTICE: Observe installation and safety instructions!** **To be sold only with installation instructions!**
Variants:	Other pole numbers Direct marking Other colors Other versions (or variants) can be requested from WAGO Sales or configured at https://configurator.wago.com/.

Electrical data

Ratings per	IEC/EN 60664-1		
Overvoltage category	III	III	II
Pollution degree	3	2	2
Nominal voltage	1000 V	1000 V	1000 V
Rated impulse withstand voltage	8 kV	8 kV	8 kV
Rated current	48 A	48 A	48 A

Approvals per	UL 1059		
Use group	B	C	D
Rated voltage	600 V	600 V	-
Rated current	38 A	38 A	-

Approvals per	CSA		
Use group	B	C	D
Rated voltage	600 V	600 V	-
Rated current	31 A	38 A	-

Connection Data

Clamping units	3
Total number of potentials	3
Number of connection types	1
Number of levels	1

Connection 1

Connection technology	Push-in CAGE CLAMP®
Actuation type	Operating tool
Solid conductor	0.2 … 10 mm² / 24 … 8 AWG
Fine-stranded conductor	0.2 … 10 mm² / 24 … 8 AWG
Fine-stranded conductor; with insulated ferrule	0.25 … 6 mm²
Fine-stranded conductor; with uninsulated ferrule	0.25 … 6 mm²
Fine-stranded conductor; with twin ferrule	0.25 … 2.5 mm²
Strip length	13 … 15 mm / 0.51 … 0.59 inches
Conductor connection direction to PCB	0 °
Pole number	3

Physical data

Pin spacing	7.5 mm / 0.295 inches
Width	24.3 mm / 0.957 inches
Height	23.6 mm / 0.929 inches
Height from the surface	19.6 mm / 0.772 inches
Depth	24.2 mm / 0.953 inches
Solder pin length	4 mm
Solder pin dimensions	1.5 x 1 mm
Drilled hole diameter	2 $^{(+0.1)}$ mm

Continued on next page

Mechanical data

Mounting type	Feed-through mounting
Suitable for through-panel applications	Yes

PCB contact

PCB contact	THT
Solder pin arrangement	over the entire terminal strip (staggered)
Number of solder pins per potential	1

Material data

Note (material data)	Information on material specifications can be found here
Color	gray
Material group	I
Insulation material (main housing)	Polyamide (PA66)
Flammability class per UL94	V0
Clamping spring material	Chrome-nickel spring steel (CrNi)
Contact material	Electrolytic copper (E_{Cu})
Contact Plating	Tin
Fire load	0.155 MJ
Weight	12 g

Environmental requirements

Limit temperature range	-60 … +105 °C
Processing temperature	-35 … +60 °C
Continuous operating temperature	-60 … +105 °C

Commercial data

PU (SPU)	90 pcs
Packaging type	Box
Country of origin	PL
GTIN	4055143587099
Customs tariff number	85369010000

Product Classification

UNSPSC	39121409
eCl@ss 10.0	27-44-04-01
eCl@ss 9.0	27-44-04-01
ETIM 9.0	EC002643
ETIM 10.0	EC002643
ECCN	NO US CLASSIFICATION

Continued on next page

Environmental Product Compliance

RoHS Compliance Status	Compliant,No Exemption

Approvals / Certificates

General approvals

Approval	Standard	Certificate Name
CB DEKRA Certification B.V.	IEC 60947-7-4	NL-103311
CSA CSA Group	C22.2	70146882
KEMA/KEUR DEKRA Certification B.V.	EN 60947-7-4	71-113203
UL Underwriters Laboratories Inc.	UL 1059	E45172

Downloads

Environmental Product Compliance

Compliance Search

Environmental Product Compliance
2626-1103/020-000

Documentation

Safety Data Sheet

Handling and Safety Instructions of PCB Terminal Blocks with Push-In Cage Clamp — pdf, 393.90 KB

Additional Information

Technical Section — 03.04.2019 — pdf, 2027.26 KB

CAD/CAE-Data

CAD data

2D/3D Models
2626-1103/020-000

CAE data

ZUKEN Portal
2626-1103/020-000

PCB Design

Symbol and Footprint via SamacSys
2626-1103/020-000

Symbol and Footprint via Ultra Librarian
2626-1103/020-000

Continued on next page

1 Compatible Products

1.1 Optional Accessories

1.1.1 Tool

1.1.1.1 Operating tool



Item No.: 210-721
Operating tool; Blade: 5.5 x 0.8 mm; with a partially insulated shaft; multicoloured

Installation Notes

Conductor termination



Insert fine-stranded conductors and remove all conductor types via operating tool.

Conductor termination



Insert solid conductors via push-in termination.