Data Sheet | Item Number: 2626-1107/020-000

PCB terminal block; 6 mm²; Pin spacing 7.5 mm; 7-pole; Push-in CAGE CLAMP®; 6,00 mm²; gray

https://www.wago.com/2626-1107/020-000

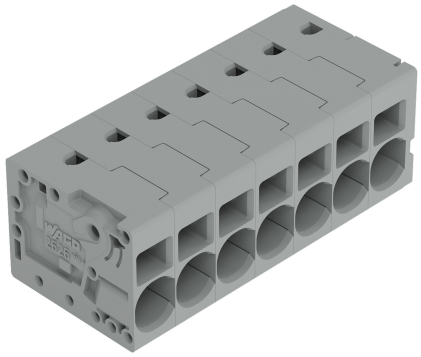

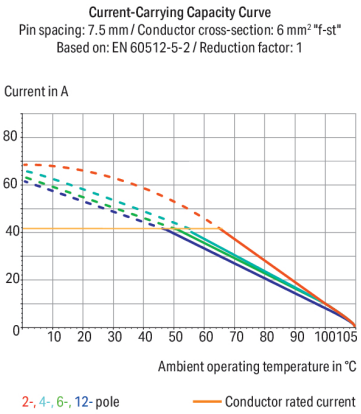

Color: gray

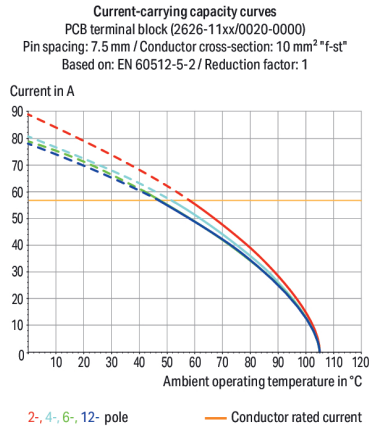

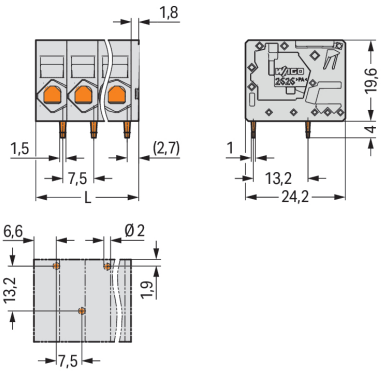

Dimensions in mm
L = (pole no. – 1) x pin spacing + 9.3 mm

PCB terminal block, 2626 Series, operating tool

This PCB terminal block (item number 2626-1107/020-000) is designed for easy and secure connections. It offers the flexibility needed for different mounting types. Ensure that the strip lengths are between 13 and 15 mm when connecting conductors to this PCB terminal block. This product features one conductor terminal and utilizes Push-in CAGE CLAMP®. Push-in CAGE CLAMP® connection technology is ideal for connecting all conductor types. Solid and fine-stranded conductors with ferrules can be plugged in without needing to use any tools—all thanks to its pluggable design. The dimensions are (54.3 x 23.6 x 24.2) mm (width x height x depth). Depending on the type of conductor, this PCB terminal block is suitable for conductor cross sections ranging from 0.2 mm² to 10 mm².

Perfect termination for all conductor types thanks to Push-in CAGE CLAMP®

Tin is used for coating the contact surfaces. This PCB terminal block is operated with an operating tool. THT is used to assemble the PCB terminal block. Insert the conductor into the board at a 0° angle..

- The right solution for every wiring task
- Soldering via THT
- Actuation via operating tool
- Pin spacing: 7.5 mm
- Suitable for feedthrough in enclosures

Notes

General safety information	**NOTICE: Observe installation and safety instructions!** **To be sold only with installation instructions!**
Variants:	Other pole numbers Direct marking Other colors Other versions (or variants) can be requested from WAGO Sales or configured at https://configurator.wago.com/.

Electrical data

Ratings per	IEC/EN 60664-1		
Overvoltage category	III	III	II
Pollution degree	3	2	2
Nominal voltage	1000 V	1000 V	1000 V
Rated impulse withstand voltage	8 kV	8 kV	8 kV
Rated current	48 A	48 A	48 A

Approvals per	UL 1059		
Use group	B	C	D
Rated voltage	600 V	600 V	-
Rated current	38 A	38 A	-

Approvals per	CSA		
Use group	B	C	D
Rated voltage	600 V	600 V	-
Rated current	31 A	38 A	-

Connection Data

Clamping units	7
Total number of potentials	7
Number of connection types	1
Number of levels	1

Connection 1

Connection technology	Push-in CAGE CLAMP®
Actuation type	Operating tool
Solid conductor	0.2 … 10 mm² / 24 … 8 AWG
Fine-stranded conductor	0.2 … 10 mm² / 24 … 8 AWG
Fine-stranded conductor; with insulated ferrule	0.25 … 6 mm²
Fine-stranded conductor; with uninsulated ferrule	0.25 … 6 mm²
Fine-stranded conductor; with twin ferrule	0.25 … 2.5 mm²
Strip length	13 … 15 mm / 0.51 … 0.59 inches
Conductor connection direction to PCB	0 °
Pole number	7

Physical data

Pin spacing	7.5 mm / 0.295 inches
Width	54.3 mm / 2.138 inches
Height	23.6 mm / 0.929 inches
Height from the surface	19.6 mm / 0.772 inches
Depth	24.2 mm / 0.953 inches
Solder pin length	4 mm
Solder pin dimensions	1.5 x 1 mm
Drilled hole diameter	2 $^{(+0.1)}$ mm

Continued on next page

Mechanical data

Mounting type	Feed-through mounting
Suitable for through-panel applications	Yes

PCB contact

PCB contact	THT
Solder pin arrangement	over the entire terminal strip (staggered)
Number of solder pins per potential	1

Material data

Note (material data)	Information on material specifications can be found here
Color	gray
Material group	I
Insulation material (main housing)	Polyamide (PA66)
Flammability class per UL94	V0
Clamping spring material	Chrome-nickel spring steel (CrNi)
Contact material	Electrolytic copper (E_{Cu})
Contact Plating	Tin
Fire load	0.339 MJ
Weight	27.2 g

Environmental requirements

Limit temperature range	-60 … +105 °C
Processing temperature	-35 … +60 °C
Continuous operating temperature	-60 … +105 °C

Commercial data

PU (SPU)	24 pcs
Packaging type	Box
Country of origin	PL
GTIN	4066966505696
Customs tariff number	85369010000

Product Classification

UNSPSC	39121409
eCl@ss 10.0	27-44-04-01
eCl@ss 9.0	27-44-04-01
ETIM 9.0	EC002643
ETIM 10.0	EC002643
ECCN	NO US CLASSIFICATION

Continued on next page

Environmental Product Compliance

RoHS Compliance Status	Compliant,No Exemption

Approvals / Certificates

General approvals

Approval	Standard	Certificate Name
CB DEKRA Certification B.V.	IEC 60947-7-4	NL-103311
CSA CSA Group	C22.2	70146882
KEMA/KEUR DEKRA Certification B.V.	EN 60947-7-4	71-113203
UL Underwriters Laboratories Inc.	UL 1059	E45172

Downloads

Environmental Product Compliance

Compliance Search

Environmental Product Compliance
2626-1107/020-000

Documentation

Safety Data Sheet

Handling and Safety Instructions of PCB Terminal Blocks with Push-In Cage Clamp — pdf, 393.90 KB

Additional Information

Technical Section — 03.04.2019 — pdf, 2027.26 KB

CAD/CAE-Data

CAD data

2D/3D Models
2626-1107/020-000

CAE data

ZUKEN Portal
2626-1107/020-000

PCB Design

Symbol and Footprint via SamacSys
2626-1107/020-000

Symbol and Footprint via Ultra Librarian
2626-1107/020-000

Continued on next page

1 Compatible Products

1.1 Optional Accessories

1.1.1 Tool

1.1.1.1 Operating tool



Item No.: 210-721
Operating tool; Blade: 5.5 x 0.8 mm; with a partially insulated shaft; multicoloured

Installation Notes

Conductor termination



Insert fine-stranded conductors and remove all conductor types via operating tool.

Conductor termination



Insert solid conductors via push-in termination.