Data Sheet | Item Number: 2626-3101/000-004

PCB terminal block; 6 mm²; Pin spacing 7.5 mm; 1-pole; Push-in CAGE CLAMP®; 6,00 mm²; black

https://www.wago.com/2626-3101/000-004

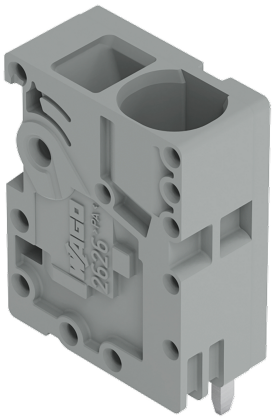

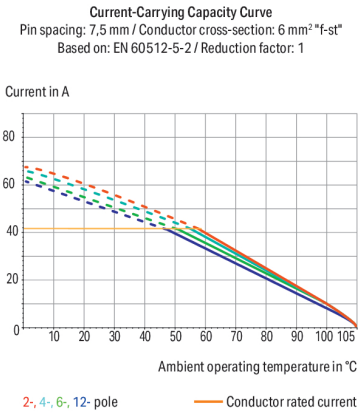

Color: ■ black

Similar to illustration

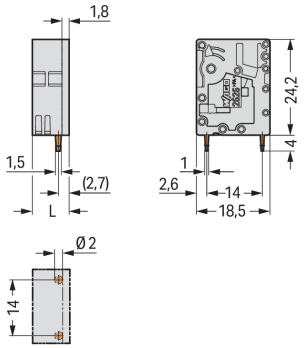

Dimensions in mm
L = 9.3 mm

PCB terminal block, 2626 Series, solder pin dimensions 1.5 x 1 mm

Our PCB terminal block (item number 2626-3101/000-004) is designed for seamless electrical installations. It is a universal connector that can be used almost anywhere, e.g., as a pluggable PCB connector, panel feedthrough header, connector for rail-mount terminal blocks, or a floating connector for different mounting methods. Strip lengths must be between 13 and 15 mm when connecting conductors to this PCB terminal block. This product features one conductor terminal and utilizes Push-in CAGE CLAMP®. Our Push-in CAGE CLAMP® is a universal, maintenance-free connection solution for all conductor types, offering a key advantage: both solid and fine-stranded conductors with ferrules can be directly inserted without the need for tools or any preparation, such as crimping the ferrule. The item's dimensions are (9.3 x 28.2 x 18.5) mm (width x height x depth). This PCB terminal block is suitable for conductor cross sections ranging from 0.2 mm² to 10 mm².

The contact surface is coated with tin. An operating tool is used to operate this PCB terminal block. The PCB terminal block is designed for THT soldering. Insert the conductor into the board at a 90° angle..

Notes

General safety information	**NOTICE: Observe installation and safety instructions!** **To be sold only with installation instructions!**
Note	The inherent stability of a single-pole PCB terminal block is less than that of a multi-pole terminal strip. The customer must therefore ensure that these terminal blocks are protected against excessive mechanical stress (e.g., torsional or bending stress), both when connecting the conductor and during subsequent use, for example by providing additional support, shortly holding the connected conductor and appropriate actuation instructions.
Variants:	Other pole numbers Direct marking Other colors Other versions (or variants) can be requested from WAGO Sales or configured at https://configurator.wago.com/.

Electrical data

Ratings per	IEC/EN 60664-1		
Overvoltage category	III	III	II
Pollution degree	3	2	2
Nominal voltage	1000 V	1000 V	1000 V
Rated impulse withstand voltage	8 kV	8 kV	8 kV
Rated current	48 A	48 A	48 A

Approvals per	UL 1059		
Use group	B	C	D
Rated voltage	600 V	600 V	-
Rated current	38 A	38 A	-

Approvals per	CSA		
Use group	B	C	D
Rated voltage	600 V	1000 V	-
Rated current	38 A	38 A	-

Connection Data

Clamping units	1
Total number of potentials	1
Number of connection types	1
Number of levels	1

Connection 1

Connection technology	Push-in CAGE CLAMP®
Actuation type	Operating tool
Solid conductor	0.2 … 10 mm² / 24 … 8 AWG
Fine-stranded conductor	0.2 … 10 mm² / 24 … 8 AWG
Fine-stranded conductor; with insulated ferrule	0.25 … 6 mm²
Fine-stranded conductor; with uninsulated ferrule	0.25 … 6 mm²
Fine-stranded conductor; with twin ferrule	0.25 … 2.5 mm²
Strip length	13 … 15 mm / 0.51 … 0.59 inches
Conductor connection direction to PCB	90 °
Pole number	1

Physical data

Pin spacing	7.5 mm / 0.295 inches
Width	9.3 mm / 0.366 inches
Height	28.2 mm / 1.11 inches
Height from the surface	24.2 mm / 0.953 inches
Depth	18.5 mm / 0.728 inches
Solder pin length	4 mm
Solder pin dimensions	1.5 x 1 mm
Drilled hole diameter	$2^{(+0.1)}$ mm

Continued on next page

Mechanical data

Mounting type	Feed-through mounting
Suitable for through-panel applications	Yes

PCB contact

PCB contact	THT
Solder pin arrangement	over the entire terminal strip (in-line)
Number of solder pins per potential	2

Material data

Note (material data)	Information on material specifications can be found here
Color	black
Material group	I
Insulation material (main housing)	Polyamide (PA66)
Flammability class per UL94	V0
Clamping spring material	Chrome-nickel spring steel (CrNi)
Contact material	Electrolytic copper (E_{Cu})
Contact Plating	Tin
Fire load	0.061 MJ
Weight	4.5 g

Environmental requirements

Limit temperature range	-60 … +105 °C
Processing temperature	-35 … +60 °C
Continuous operating temperature	-60 … +105 °C

Commercial data

PU (SPU)	180 pcs
Packaging type	Box
Country of origin	PL
GTIN	4066966511253
Customs tariff number	85369010000

Product Classification

UNSPSC	39121409
eCl@ss 10.0	27-44-04-01
eCl@ss 9.0	27-44-04-01
ETIM 9.0	EC002643
ETIM 10.0	EC002643
ECCN	NO US CLASSIFICATION

Continued on next page

Environmental Product Compliance

RoHS Compliance Status	Compliant,No Exemption

Approvals / Certificates

Declarations of conformity and manufacturer's declarations

Approval	Standard	Certificate Name
Railway WAGO GmbH & Co. KG	-	Z00004416.000

Downloads

Environmental Product Compliance

Compliance Search

Environmental Product Compliance
2626-3101/000-004

Documentation

Safety Data Sheet

Handling and Safety Instructions of PCB Terminal Blocks with Push-In Cage Clamp	pdf 393.90 KB	

Additional Information

Technical Section	03.04.2019	pdf 2027.26 KB	

CAD/CAE-Data

CAD data

2D/3D Models
2626-3101/000-004

CAE data

ZUKEN Portal
2626-3101/000-004

PCB Design

Symbol and Footprint via SamacSys
2626-3101/000-004

Symbol and Footprint via Ultra Librarian
2626-3101/000-004

Continued on next page

1 Compatible Products

1.1 Optional Accessories

1.1.1 Tool

1.1.1.1 Operating tool



Item No.: 210-721
Operating tool; Blade: 5.5 x 0.8 mm; with a partially insulated shaft; multicoloured

Installation Notes

Conductor termination



Insert fine-stranded conductors and remove all conductor types via operating tool.

Conductor termination



Insert solid conductors via push-in termination.