Data Sheet | Item Number: 2626-3111/020-000

PCB terminal block; 6 mm²; Pin spacing 7.5 mm; 11-pole; Push-in CAGE CLAMP®; 6,00 mm²; gray

https://www.wago.com/2626-3111/020-000

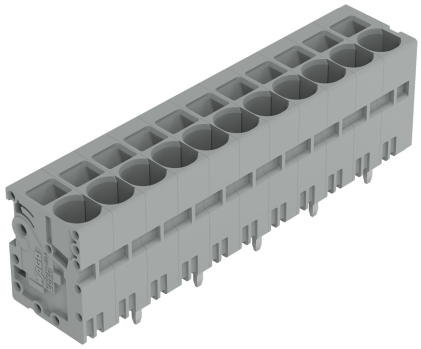

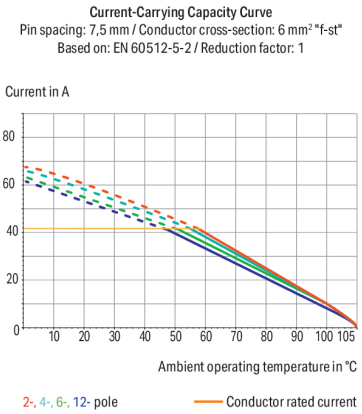

Color: gray

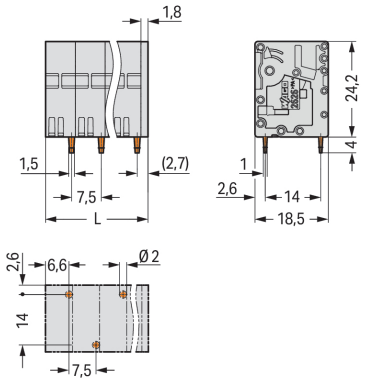

Dimensions in mm
L = (pole no. – 1) x pin spacing + 9.3 mm

PCB terminal block, 2626 Series, solder pin dimensions 1.5 x 1 mm

Our PCB terminal block (item number 2626-3111/020-000) makes connections quick and easy. You can rely on trusted safety with these PCB terminal blocks, perfect for a wide range of applications when designing your devices. Ensure that the strip lengths are between 13 and 15 mm when connecting conductors to this PCB terminal block. This product features one conductor terminal and utilizes Push-in CAGE CLAMP®. Our Push-in CAGE CLAMP® is a universal, maintenance-free connection solution for all conductor types, offering a key advantage: both solid and fine-stranded conductors with ferrules can be directly inserted without the need for tools or any preparation, such as crimping the ferrule. Dimensions: (84.3 x 28.2 x 18.5) mm (width x height x depth). This PCB terminal block is suitable for conductor cross sections ranging from 0.2 mm² to 10 mm².

The contact surface is coated with tin. This PCB terminal block is operated with an operating tool. The PCB terminal block is designed for THT soldering. The conductor is designed to be inserted into the board at an angle of 90°..

Notes

General safety information	**NOTICE: Observe installation and safety instructions!** **To be sold only with installation instructions!**
Variants:	Other pole numbers Direct marking Other colors Other versions (or variants) can be requested from WAGO Sales or configured at https://configurator.wago.com/.

Electrical data

Ratings per	IEC/EN 60664-1		
Overvoltage category	III	III	II
Pollution degree	3	2	2
Nominal voltage	1000 V	1000 V	1000 V
Rated impulse withstand voltage	8 kV	8 kV	8 kV
Rated current	48 A	48 A	48 A

Approvals per	UL 1059		
Use group	B	C	D
Rated voltage	600 V	600 V	-
Rated current	38 A	38 A	-

Approvals per	CSA		
Use group	B	C	D
Rated voltage	600 V	600 V	-
Rated current	31 A	38 A	-

Connection Data

Clamping units	11
Total number of potentials	11
Number of connection types	1
Number of levels	1

Connection 1

Connection technology	Push-in CAGE CLAMP®
Actuation type	Operating tool
Solid conductor	0.2 … 10 mm² / 24 … 8 AWG
Fine-stranded conductor	0.2 … 10 mm² / 24 … 8 AWG
Fine-stranded conductor; with insulated ferrule	0.25 … 6 mm²
Fine-stranded conductor; with uninsulated ferrule	0.25 … 6 mm²
Fine-stranded conductor; with twin ferrule	0.25 … 2.5 mm²
Strip length	13 … 15 mm / 0.51 … 0.59 inches
Conductor connection direction to PCB	90 °
Pole number	11

Physical data

Pin spacing	7.5 mm / 0.295 inches
Width	84.3 mm / 3.319 inches
Height	28.2 mm / 1.11 inches
Height from the surface	24.2 mm / 0.953 inches
Depth	18.5 mm / 0.728 inches
Solder pin length	4 mm
Solder pin dimensions	1.5 x 1 mm
Drilled hole diameter	2 $^{(+0.1)}$ mm

Continued on next page

Mechanical data

Mounting type	Feed-through mounting
Suitable for through-panel applications	Yes

PCB contact

PCB contact	THT
Solder pin arrangement	over the entire terminal strip (staggered)
Number of solder pins per potential	1

Material data

Note (material data)	Information on material specifications can be found here
Color	gray
Material group	I
Insulation material (main housing)	Polyamide (PA66)
Flammability class per UL94	V0
Clamping spring material	Chrome-nickel spring steel (CrNi)
Contact material	Electrolytic copper (E_{Cu})
Contact Plating	Tin
Fire load	0.5 MJ
Weight	41.5 g

Environmental requirements

Limit temperature range	-60 … +105 °C
Processing temperature	-35 … +60 °C
Continuous operating temperature	-60 … +105 °C

Commercial data

PU (SPU)	18 pcs
Packaging type	Box
Country of origin	PL
GTIN	4066966505467
Customs tariff number	85369010000

Product Classification

UNSPSC	39121409
eCl@ss 10.0	27-44-04-01
eCl@ss 9.0	27-44-04-01
ETIM 9.0	EC002643
ETIM 10.0	EC002643
ECCN	NO US CLASSIFICATION

Continued on next page

Environmental Product Compliance

RoHS Compliance Status	Compliant,No Exemption

Approvals / Certificates

General approvals

Approval	Standard	Certificate Name
CB DEKRA Certification B.V.	IEC 60947-7-4	NL-103311
CSA CSA Group	C22.2	70146882
KEMA/KEUR DEKRA Certification B.V.	EN 60947-7-4	71-113203
UL Underwriters Laboratories Inc.	UL 1059	E45172

Downloads

Environmental Product Compliance

Compliance Search

Environmental Product Compliance
2626-3111/020-000

Documentation

Safety Data Sheet

Handling and Safety Instructions of PCB Terminal Blocks with Push-In Cage Clamp	pdf 393.90 KB	

Additional Information

Technical Section	03.04.2019	pdf 2027.26 KB

CAD/CAE-Data

CAD data

2D/3D Models
2626-3111/020-000

CAE data

ZUKEN Portal
2626-3111/020-000

PCB Design

Symbol and Footprint via SamacSys
2626-3111/020-000

Symbol and Footprint via Ultra Librarian
2626-3111/020-000

Continued on next page

1 Compatible Products

1.1 Optional Accessories

1.1.1 Tool

1.1.1.1 Operating tool



Item No.: 210-721
Operating tool; Blade: 5.5 x 0.8 mm; with a partially insulated shaft; multicoloured

Installation Notes

Conductor termination



Insert fine-stranded conductors and remove all conductor types via operating tool.

Conductor termination



Insert solid conductors via push-in termination.