Data Sheet | Item Number: 2626-3353

PCB terminal block; 6 mm²; Pin spacing 12.5 mm; 3-pole; Push-in CAGE CLAMP®; 6,00 mm²; gray

https://www.wago.com/2626-3353

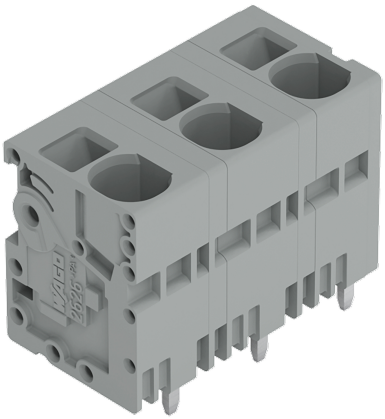

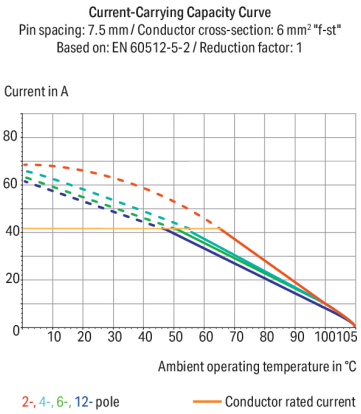

Color: gray

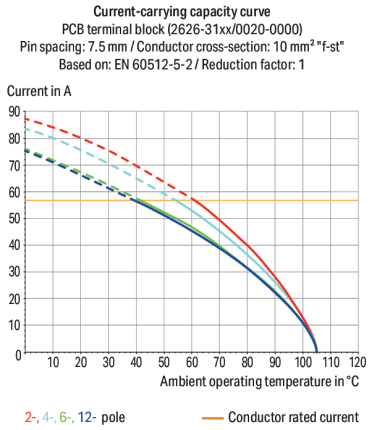

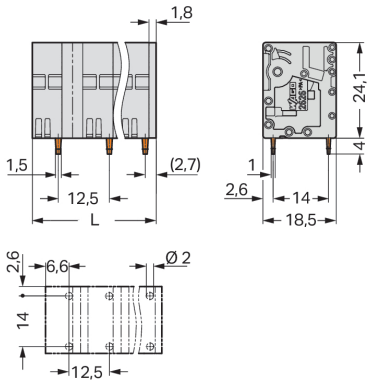

L = (pole no. – 1) x pin spacing + 9.3 mm

PCB terminal block, 2626 Series, operating tool

Connecting conductors is quick and easy with this PCB terminal block (item number 2626-3353). You can rely on tried and tested safety with these PCB terminal blocks, perfect for a host of applications when designing your devices. Conductors can only be connected to this PCB terminal block if their strip length is between 13 and 15 mm . Featuring one conductor terminal along with Push-in CAGE CLAMP®, this connector is highly versatile. Push-in CAGE CLAMP® connection technology is ideal for connecting all conductor types. It allows direct insertion of both solid and fine-stranded conductors with ferrules without the need for tools—all thanks to its pluggable design. The dimensions are (34.3 x 28.2 x 18.5) mm (width x height x depth). Depending on the conductor type, this PCB terminal block is designed for conductor cross sections ranging from 0.2 mm² to 10 mm².

Tin is used for coating the contact surfaces. An operating tool is used to operate this PCB terminal block. THT is used to assemble the PCB terminal block. The conductor is designed to be inserted at a 90° angle..

Notes

General safety information	**NOTICE: Observe installation and safety instructions!** **To be sold only with installation instructions!**
Variants:	Other pole numbers Direct marking Other colors Other versions (or variants) can be requested from WAGO Sales or configured at https://configurator.wago.com/.

Electrical data

Ratings per	IEC/EN 60664-1		
Overvoltage category	III	III	II
Pollution degree	3	2	2
Nominal voltage	1000 V	1000 V	1000 V
Rated impulse withstand voltage	8 kV	8 kV	8 kV
Rated current	48 A	48 A	48 A

Ratings per UL	
Rated voltage UL (Use Group B)	600 V
Rated current UL (Use Group B)	38 A
Rated voltage UL (Use Group C)	600 V
Rated current UL (Use Group C)	38 A

Approvals per	CSA		
Use group	B	C	D
Rated voltage	600 V	600 V	-
Rated current	38 A	38 A	-

Connection Data

Clamping units	3
Total number of potentials	3
Number of connection types	1
Number of levels	1

Connection 1

Connection technology	Push-in CAGE CLAMP®
Actuation type	Operating tool
Solid conductor	0.2 … 10 mm² / 24 … 8 AWG
Fine-stranded conductor	0.2 … 10 mm² / 24 … 8 AWG
Fine-stranded conductor; with insulated ferrule	0.25 … 6 mm²
Fine-stranded conductor; with uninsulated ferrule	0.25 … 6 mm²
Fine-stranded conductor; with twin ferrule	0.25 … 2.5 mm²
Strip length	13 … 15 mm / 0.51 … 0.59 inches
Conductor connection direction to PCB	90 °
Pole number	3

Physical data

Pin spacing	12.5 mm / 0.492 inches
Width	34.3 mm / 1.350 inches
Height	28.2 mm / 1.11 inches
Height from the surface	24.2 mm / 0.953 inches
Depth	18.5 mm / 0.728 inches
Solder pin length	4 mm
Solder pin dimensions	1.5 x 1 mm
Drilled hole diameter	2 $^{(+0.1)}$ mm

Continued on next page

Mechanical data

Mounting type	Feed-through mounting
Suitable for through-panel applications	Yes

PCB contact

PCB contact	THT
Solder pin arrangement	over the entire terminal strip (in-line)
Number of solder pins per potential	2

Material data

Note (material data)	Information on material specifications can be found here
Color	gray
Material group	I
Insulation material (main housing)	Polyamide (PA66)
Flammability class per UL94	V0
Clamping spring material	Chrome-nickel spring steel (CrNi)
Contact material	Electrolytic copper (E_{Cu})
Contact Plating	Tin
Fire load	0.228 MJ
Weight	15.3 g

Environmental requirements

Limit temperature range	-60 … +105 °C
Processing temperature	-35 … +60 °C
Continuous operating temperature	-60 … +105 °C

Commercial data

PU (SPU)	45 pcs
Packaging type	Box
Country of origin	PL
GTIN	4066966506655
Customs tariff number	85369010000

Product Classification

UNSPSC	39121409
ETIM 9.0	EC002643
ETIM 10.0	EC002643
ECCN	NO US CLASSIFICATION

Environmental Product Compliance

RoHS Compliance Status	Compliant,No Exemption

Continued on next page

Approvals / Certificates

General approvals

Approval	Standard	Certificate Name
CB DEKRA Certification B.V.	IEC 60947-7-4	NL-103311
CSA CSA Group	C22.2	70146882
KEMA/KEUR DEKRA Certification B.V.	EN 60947-7-4	71-113203
UL Underwriters Laboratories Inc.	UL 1059	E45172

Declarations of conformity and manufacturer's declarations

Approval	Standard	Certificate Name
Railway WAGO GmbH & Co. KG	-	Z00004416.000

Downloads

Environmental Product Compliance

Compliance Search

Environmental Product Compliance 2626-3353

Documentation

Safety Data Sheet

Handling and Safety Instructions of PCB Terminal Blocks with Push-In Cage Clamp	pdf 393.90 KB	

Additional Information

Technical Section	03.04.2019	pdf 2027.26 KB

CAD/CAE-Data

CAD data

2D/3D Models 2626-3353

CAE data

ZUKEN Portal 2626-3353

PCB Design

Symbol and Footprint via SamacSys 2626-3353

Symbol and Footprint via Ultra Librarian 2626-3353

Continued on next page

1 Compatible Products

1.1 Optional Accessories

1.1.1 Tool

1.1.1.1 Operating tool



Item No.: 210-721
Operating tool; Blade: 5.5 x 0.8 mm; with a partially insulated shaft; multicoloured

Installation Notes

Conductor termination



Insert fine-stranded conductors and remove all conductor types via operating tool.

Conductor termination



Insert solid conductors via push-in termination.