Data Sheet | Item Number: 2636-1353

PCB terminal block; 16 mm²; Pin spacing 15 mm; 3-pole; Push-in CAGE CLAMP®; 16,00 mm²; gray

https://www.wago.com/2636-1353

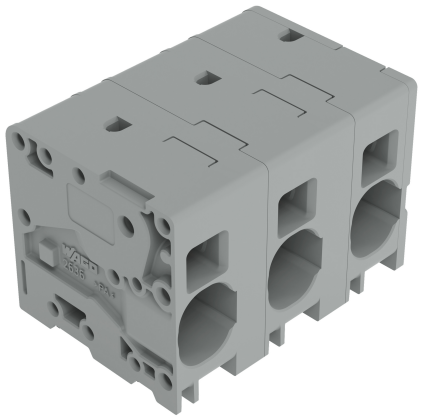

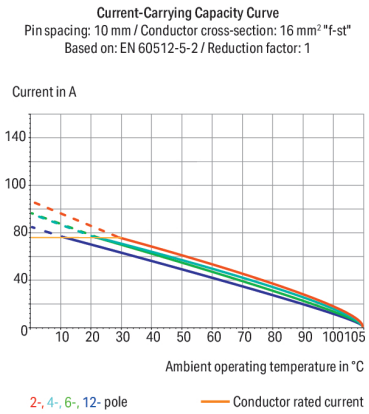

Color: gray

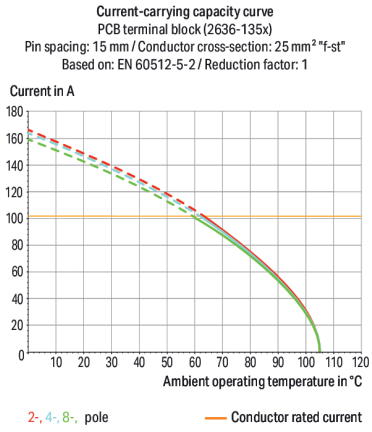

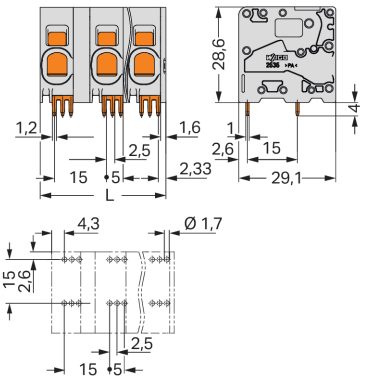

L = (pole no. – 1) x pin spacing + 11.6 mm

PCB terminal block, 2636 Series, with 15 mm pin spacing

Our PCB terminal block (item number 2636-1353) simplifies electrical installations. You can rely on trusted safety with these PCB terminal blocks, perfect for a host of applications when designing your devices. Ensure that the strip lengths are between 18 and 20 mm when connecting conductors to this PCB terminal block. This product features one conductor terminal and utilizes Push-in CAGE CLAMP®. Push-in CAGE CLAMP® connection technology is ideal for connecting all conductor types. Solid and fine-stranded conductors with ferrules can be pushed in without needing to use any tools—all thanks to its pluggable design. Dimensions: (41.6 x 32.6 x 29.1) mm (width x height x depth). This PCB terminal block is suitable for conductor cross sections ranging from 0.75 mm² to 16 mm².

Tin is used for coating the contact surfaces. An operating tool is used to operate this PCB terminal block. The PCB terminal block is designed for THT soldering. Insert the conductor into the board at a 0° angle..

Notes

Variants:	Other pole numbers Direct marking Other colors Other versions (or variants) can be requested from WAGO Sales or configured at https://configurator.wago.com/.

Electrical data

Ratings per	IEC/EN 60664-1		
Overvoltage category	III	III	II
Pollution degree	3	2	2
Nominal voltage	1000 V	1000 V	1000 V
Rated impulse withstand voltage	8 kV	8 kV	8 kV
Rated current	76 A	76 A	76 A

Approvals per	UL 1059		
Use group	B	C	D
Rated voltage	300 V	300 V	600 V
Rated current	85 A	85 A	5 A

Approvals per	CSA		
Use group	B	C	D
Rated voltage	300 V	300 V	600 V
Rated current	66 A	66 A	66 A

Connection Data

Clamping units	3
Total number of potentials	3
Number of connection types	1
Number of levels	1

Connection 1

Connection technology	Push-in CAGE CLAMP®
Actuation type	Operating tool
Solid conductor	0.75 … 16 mm² / 18 … 4 AWG
Fine-stranded conductor	0.75 … 25 mm² / 18 … 4 AWG
Fine-stranded conductor; with insulated ferrule	0.75 … 16 mm²
Fine-stranded conductor; with uninsulated ferrule	0.75 … 16 mm²
Fine-stranded conductor; with twin ferrule	0.75 … 6 mm²
Strip length	18 … 20 mm / 0.71 … 0.79 inches
Conductor connection direction to PCB	0 °
Pole number	3

Physical data

Pin spacing	15 mm / 0.591 inches
Width	41.6 mm / 1.638 inches
Height	32.6 mm / 1.283 inches
Height from the surface	28.6 mm / 1.126 inches
Depth	29.1 mm / 1.146 inches
Solder pin length	4 mm
Solder pin dimensions	1.2 x 1 mm
Drilled hole diameter	1.7 $^{(+0.1)}$ mm

Continued on next page

Mechanical data

Mounting type	Feed-through mounting
Suitable for through-panel applications	Yes

PCB contact

PCB contact	THT
Solder pin arrangement	over the entire terminal strip (in-line)
Number of solder pins per potential	6

Material data

Note (material data)	Information on material specifications can be found here
Color	gray
Material group	I
Insulation material (main housing)	Polyamide (PA66)
Flammability class per UL94	V0
Clamping spring material	Chrome-nickel spring steel (CrNi)
Contact material	Electrolytic copper (E_{Cu})
Contact Plating	Tin
Fire load	0.398 MJ
Weight	30.6 g

Environmental requirements

Limit temperature range	-60 … +105 °C
Processing temperature	-35 … +60 °C
Continuous operating temperature	-60 … +105 °C

Commercial data

PU (SPU)	24 pcs
Packaging type	Box
Country of origin	PL
GTIN	4066966514995
Customs tariff number	85369010000

Product Classification

UNSPSC	39121409
ETIM 9.0	EC002643
ETIM 10.0	EC002643
ECCN	NO US CLASSIFICATION

Environmental Product Compliance

RoHS Compliance Status	Compliant,No Exemption

Continued on next page

Approvals / Certificates

General approvals

Approval	Standard	Certificate Name
CB DEKRA Certification B.V.	IEC 60947-7-4	NL-61617
CSA DEKRA Certification B.V.	C22.2	70154737
DEKRA DEKRA Certification B.V.	EN 60947-7-4	71-148282
KEMA/KEUR DEKRA Certification B.V.	EN 60947-7-4	71-110774
UL Underwriters Laboratories Inc.	C22.2 No. 158	UL-US-L45172-6187173-60217102-1

Declarations of conformity and manufacturer's declarations

Approval	Standard	Certificate Name
Railway WAGO GmbH & Co. KG	-	Z00004417.000

Downloads

Environmental Product Compliance

Compliance Search

Environmental Product Compliance 2636-1353

Documentation

Additional Information

Technical Section	03.04.2019	pdf 2027.26 KB

CAD/CAE-Data

CAD data

2D/3D Models 2636-1353

CAE data

ZUKEN Portal 2636-1353

PCB Design

Symbol and Footprint via SamacSys 2636-1353

Symbol and Footprint via Ultra Librarian 2636-1353

Continued on next page

1 Compatible Products

1.1 Optional Accessories

1.1.1 Ferrule

1.1.1.1 Ferrule



Item No.: 216-284
Ferrule; Sleeve for 1.5 mm² / AWG 16; insulated; electro-tin plated; electrolytic copper; gastight crimped; acc. to DIN 46228, Part 4/09.90; black



Item No.: 216-289
Ferrule; Sleeve for 10 mm² / AWG 8; insulated; electro-tin plated; electrolytic copper; gastight crimped; acc. to DIN 46228, Part 4/09.90; red



Item No.: 216-210
Ferrule; Sleeve for 16 mm² / AWG 6; insulated; electro-tin plated; electrolytic copper; gastight crimped; acc. to DIN 46228, Part 4/09.90; blue



Item No.: 216-286
Ferrule; Sleeve for 2.5 mm² / AWG 14; insulated; electro-tin plated; electrolytic copper; gastight crimped; acc. to DIN 46228, Part 4/09.90; blue



Item No.: 216-287
Ferrule; Sleeve for 4 mm² / AWG 12; insulated; electro-tin plated; electrolytic copper; gastight crimped; acc. to DIN 46228, Part 4/09.90; gray



Item No.: 216-288
Ferrule; Sleeve for 6 mm² / AWG 10; insulated; electro-tin plated; electrolytic copper; gastight crimped; acc. to DIN 46228, Part 4/09.90; yellow

1.1.2 Tool

1.1.2.1 Operating tool



Item No.: 210-721
Operating tool; Blade: 5.5 x 0.8 mm; with a partially insulated shaft; multicoloured

Installation Notes

Conductor termination



Insert fine-stranded conductors and remove all conductor types via operating tool.

Conductor termination

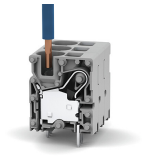

Insert solid conductors via push-in termination.