Data Sheet | Item Number: 267-223

Female connector; without ground contact; with strain relief plate; 3-pole; white/gray

https://www.wago.com/267-223



Color: white/gray

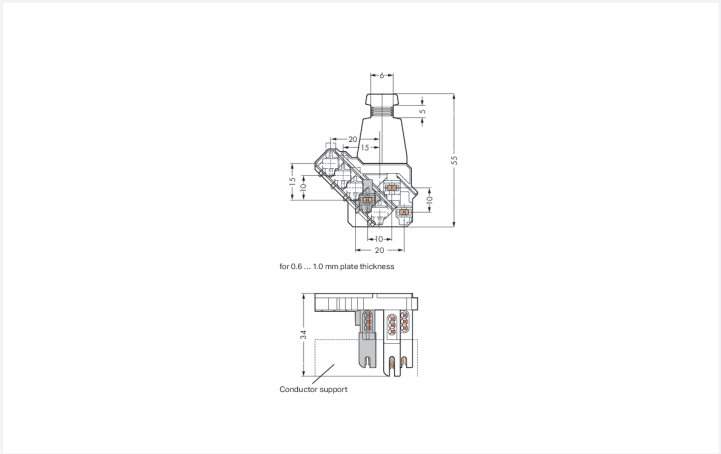

Dimensions in mm

Female connector, 267 Series, white/gray

This female connector (item number 267-223) is designed for hassle-free electrical installations. Ensure that the strip lengths are 8 mm when connecting conductors to this female connector. This product features one conductor terminal and utilizes PUSH WIRE®. Our PUSH WIRE® connection uses the stiffness of the conductor to overcome the clamping spring's contact force, allowing faster and easier conductor clamping. Depending on the conductor type, this female connector is ideal for conductor cross sections ranging from 0.5 mm² to 1 mm².

The contact surface is coated with tin.

- Safe and fast installation
- Compact sizes

Electrical data

Ratings per	IEC/EN 60664-1		
Overvoltage category	III	III	II
Pollution degree	3	2	2
Nominal voltage	-	500 V	-
Rated impulse withstand voltage	-	4 kV	-
Rated current	-	6 A	-

Connection Data

Number of connection types	1

Connection 1

Connection technology	PUSH WIRE®
Solid conductor	0.5 … 1 mm²
Strip length	8 mm / 0.31 inches
Pole number	3

Material data

Note (material data)	Information on material specifications can be found here
Color	white/gray
Material group	I
Insulation material (main housing)	Polyamide (PA66)
Flammability class per UL94	V0
Clamping spring material	Chrome-nickel spring steel (CrNi)
Contact material	Electrolytic copper (E_{Cu})
Contact Plating	Tin
Fire load	0.156 MJ
Weight	7.9 g

Environmental requirements

Temperature stability	105 °C

Commercial data

Product Group	8 (Misc. Chassis Mount Blocks)
PU (SPU)	500 pcs
Packaging type	Bag
Country of origin	PL
GTIN	4044918966962
Customs tariff number	85366990990

Product Classification

UNSPSC	39121409
eCl@ss 10.0	27-44-03-14
eCl@ss 9.0	27-44-03-14
ETIM 9.0	EC002560
ETIM 10.0	EC002560
ECCN	NO US CLASSIFICATION

Environmental Product Compliance

RoHS Compliance Status	Compliant,No Exemption

Approvals / Certificates

General approvals

Approval	Standard	Certificate Name
CCA DEKRA Certification B.V.	EN 61984	NL-47718
KEMA/KEUR DEKRA Certification B.V.	EN 61984	71-100641
UL Underwriters Laboratories Inc.	UL 1977	UL-US-L45171-12-52204002
VDE VDE Prüf- und Zertifizierungsinstitut	EN 61984	40032309

Continued on next page

Downloads

Environmental Product Compliance

Compliance Search

Environmental Product Compliance 267-223

Documentation

Additional Information

Technical Section	03.04.2019	pdf 2027.26 KB

CAD/CAE-Data

CAD data

2D/3D Models 267-223

CAE data

ZUKEN Portal 267-223