Data Sheet | Item Number: 2716-204

PCB terminal block; lever; 16 mm²; Pin spacing 15 mm; 4-pole; CAGE CLAMP®; gray

https://www.wago.com/2716-204

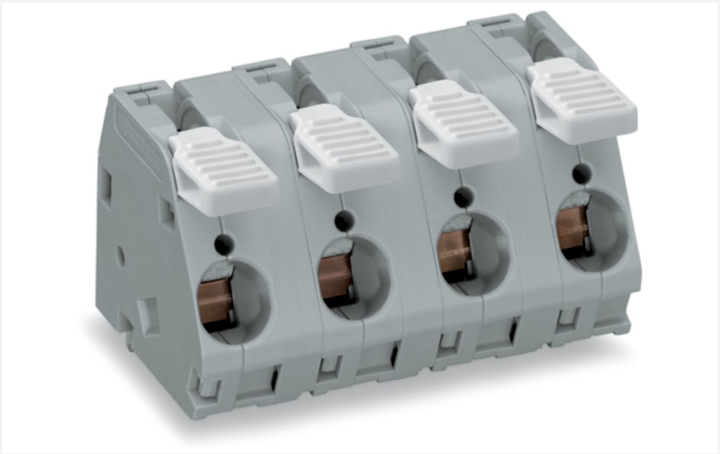

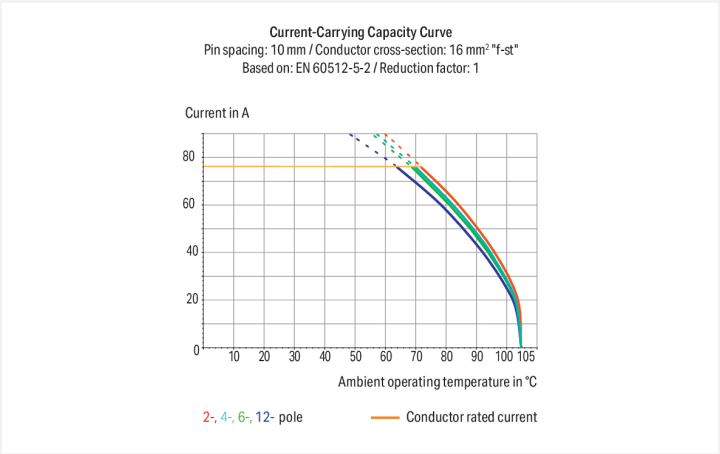

Color: gray

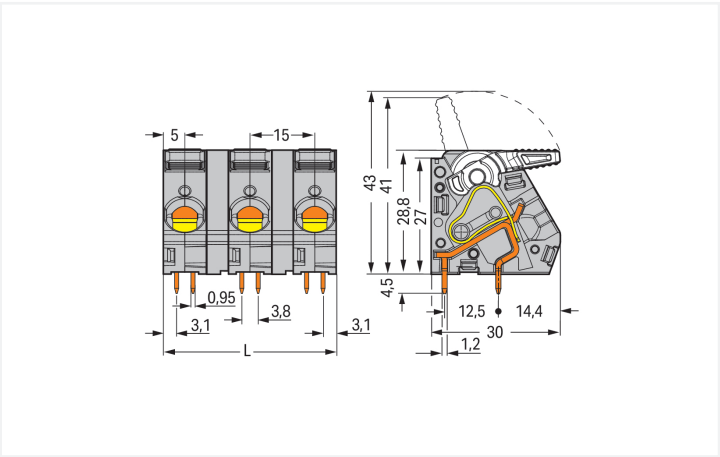

Dimensions in mm
L = (pole no. x pin spacing) – 5 mm

PCB terminal block, 2716 Series, CAGE CLAMP®

Quick and easy connections are guaranteed with this PCB terminal block (item number 2716-204). You can count on tried and tested safety with these PCB terminal blocks, perfect for a wide range of applications when designing your devices. Strip lengths must be between 12 and 13 mm when connecting conductors to this PCB terminal block. Featuring one conductor terminal along with CAGE CLAMP®, this connector is highly versatile. Our reliable and maintenance-free CAGE CLAMP® connection makes it easy to connect all types of conductors without having to prepare the conductor. For example, you don't need to crimp ferrules. The dimensions are (55 x 33.3 x 30) mm (width x height x depth). Depending on the conductor type, this PCB terminal block is ideal for conductor cross sections ranging from 1.5 mm² to 16 mm².

The contact surface is coated with tin. This PCB terminal block is operated with a lever. THT is used to solder the PCB terminal block. Insert the conductor into the board at a 30° angle..

Notes

Variants:	Other pole numbers Other colors Mixed-color PCB connector strips Direct marking Other versions (or variants) can be requested from WAGO Sales or configured at https://configurator.wago.com/.

Electrical data

Ratings per	IEC/EN 60664-1		
Overvoltage category	III	III	II
Pollution degree	3	2	2
Nominal voltage	800 V	1000 V	1000 V
Rated impulse withstand voltage	8 kV	8 kV	8 kV
Rated current	76 A	76 A	76 A

Approvals per	UL 1059		
Use group	B	C	D
Rated voltage	600 V	600 V	-
Rated current	65 A	65 A	-

Connection Data

Clamping units	4
Total number of potentials	4
Number of connection types	1
Number of levels	1

Connection 1

Connection technology	CAGE CLAMP®
Actuation type	Lever
Solid conductor	1.5 … 16 mm² / 16 … 6 AWG
Fine-stranded conductor	1.5 … 16 mm² / 16 … 6 AWG
Fine-stranded conductor; with insulated ferrule	1.5 … 10 mm²
Fine-stranded conductor; with uninsulated ferrule	1.5 … 10 mm²
Strip length	12 … 13 mm / 0.47 … 0.51 inches
Conductor connection direction to PCB	30 °
Pole number	4

Physical data

Pin spacing	15 mm / 0.591 inches
Width	55 mm / 2.165 inches
Height	33.3 mm / 1.311 inches
Height from the surface	28.8 mm / 1.134 inches
Depth	30 mm / 1.181 inches
Solder pin length	4.5 mm
Solder pin dimensions	0.95 x 1.2 mm
Drilled hole diameter	1.6 $^{(+0.1)}$ mm

PCB contact

PCB contact	THT
Solder pin arrangement	over the entire terminal strip (in-line)
Number of solder pins per potential	4

Continued on next page

Material data

Note (material data)	Information on material specifications can be found here
Color	gray
Material group	I
Insulation material (main housing)	Polyamide (PA66)
Flammability class per UL94	V0
Clamping spring material	Chrome-nickel spring steel (CrNi)
Contact material	Electrolytic copper (E_{Cu})
Contact Plating	Tin
Fire load	0.684 MJ
Weight	42.1 g

Environmental requirements

Limit temperature range	-60 … +105 °C

Commercial data

Product Group	4 (Printed Circuit Connectors)
PU (SPU)	20 pcs
Packaging type	Box
Country of origin	PL
GTIN	4045454739430
Customs tariff number	85369010000

Product Classification

UNSPSC	39121409
eCl@ss 10.0	27-44-04-01
eCl@ss 9.0	27-44-04-01
ETIM 9.0	EC002643
ETIM 10.0	EC002643
ECCN	NO US CLASSIFICATION

Environmental Product Compliance

RoHS Compliance Status	Compliant,No Exemption

Approvals / Certificates

General approvals

Approval	Standard	Certificate Name
CCA DEKRA Certification B.V.	EN 60947	NTR NL-7131
KEMA/KEUR DEKRA Certification B.V.	EN 60947	71-117512
UL Underwriters Laboratories Inc.	UL 1059	UL-US-L45172-618716-41211891-7

Continued on next page

Downloads

Environmental Product Compliance

Compliance Search

Environmental Product Compliance 2716-204

Documentation

Additional Information

Technical Section	03.04.2019	pdf 2027.26 KB

CAD/CAE-Data

CAD data

2D/3D Models 2716-204

CAE data

ZUKEN Portal 2716-204

PCB Design

Symbol and Footprint via SamacSys 2716-204

Symbol and Footprint via Ultra Librarian 2716-204

1 Compatible Products

1.1 Optional Accessories

1.1.1 Ferrule

1.1.1.1 Ferrule



Item No.: 216-264
Ferrule; Sleeve for 1.5 mm² / AWG 16; insulated; electro-tin plated; electrolytic copper; gastight crimped; acc. to DIN 46228, Part 4/09.90; black



Item No.: 216-209
Ferrule; Sleeve for 10 mm² / AWG 8; insulated; electro-tin plated; red



Item No.: 216-109
Ferrule; Sleeve for 10 mm² / AWG 8; uninsulated; electro-tin plated



Item No.: 216-266
Ferrule; Sleeve for 2.5 mm² / AWG 14; insulated; electro-tin plated; electrolytic copper; gastight crimped; acc. to DIN 46228, Part 4/09.90; blue



Item No.: 216-267
Ferrule; Sleeve for 4 mm² / AWG 12; insulated; electro-tin plated; electrolytic copper; gastight crimped; acc. to DIN 46228, Part 4/09.90; gray



Item No.: 216-208
Ferrule; Sleeve for 6 mm² / AWG 10; insulated; electro-tin plated; electrolytic copper; gastight crimped; acc. to DIN 46228, Part 4/09.90; yellow



Item No.: 216-108
Ferrule; Sleeve for 6 mm² / AWG 10; uninsulated; electro-tin plated; silver-colored

Continued on next page

1.1.2 Test and measurement

1.1.2.1 Testing accessories



Item No.: 210-136
Test plug; 2 mm Ø; with 500 mm cable; red

Installation Notes

Conductor termination



To open the clamping unit, pull the operating lever all the way back — 2706 and 2716 Series.

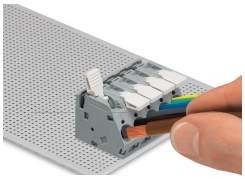

Inserting/removing a conductor – 2706 and 2716 Series.

Testing

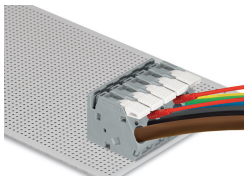

Testing with test plug – 2706 and 2716 Series.