Data Sheet | Item Number: 272-131

Power supply connector; without push-buttons; with snap-in mounting feet; without ground contact; 1-pole; white

https://www.wago.com/272-131

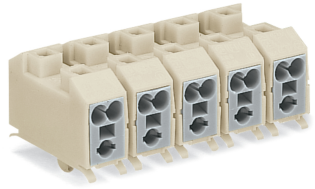

Color: white

Similar to illustration

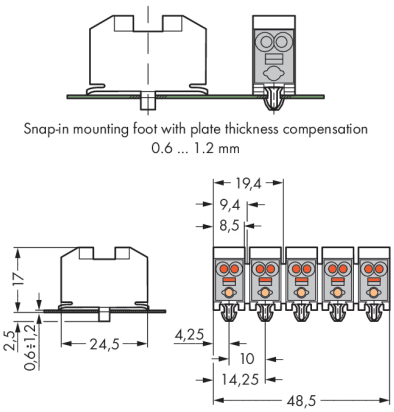

Dimensions in mm

Field-wiring terminal block, 272 Series, PUSH WIRE®

Connecting conductors is quick and easy with this field-wiring terminal block (item number 272-131). Ensure that the strip lengths are between 8 and 9 mm when connecting conductors to this field-wiring terminal block. This product incorporates one conductor terminal and utilizes PUSH WIRE®. Our PUSH WIRE® connection offers a quick and easy method for connecting solid conductors. The dimensions are (8.5 x 19.5 x 24.5) mm (width x height x depth).

Electrical data

Ratings per	IEC/EN 60664-1		
Overvoltage category	III	III	II
Pollution degree	3	2	2
Nominal voltage	-	400 V	-
Rated impulse withstand voltage	-	4 kV	-
Rated current	-	18 A	-

Connection Data

Clamping units	4
Total number of potentials	1
Number of connection types	1

Connection 1

Connection technology	PUSH WIRE®
Strip length	8 ... 9 mm / 0.31 ... 0.35 inches
Pole number	1

Physical data

Width	8.5 mm / 0.335 inches
Height	19.5 mm / 0.767 inches
Depth	24.5 mm / 0.965 inches

Material data

Note (material data)	Information on material specifications can be found here
Color	white
Material group	I
Insulation material (main housing)	Polyamide (PA66)
Flammability class per UL94	V0
Fire load	0.049 MJ
Weight	3.2 g

Commercial data

Product Group	8 (Misc. Chassis Mount Blocks)
PU (SPU)	1000 pcs
Packaging type	Bag
Country of origin	DE
GTIN	4044918429382
Customs tariff number	85369010000

Product Classification

UNSPSC	39121402
eCl@ss 10.0	27-14-11-04
eCl@ss 9.0	27-14-11-04
ETIM 9.0	EC000446
ETIM 10.0	EC000446
ECCN	NO US CLASSIFICATION

Environmental Product Compliance

RoHS Compliance Status	Compliant,No Exemption

Approvals / Certificates

General approvals

Approval	Standard	Certificate Name
CCA DEKRA Certification B.V.	EN 60998	NTR NL 7384
CCA DEKRA Certification B.V.	EN 60998	2176190.01
CSA DEKRA Certification B.V.	C22.2 No. 158	70048844
UR Underwriters Laboratories Inc.	UL 1059	E45172

Declarations of conformity and manufacturer's declarations

Approval	Standard	Certificate Name
EU-Declaration of Conformity WAGO GmbH & Co. KG	-	-
UK-Declaration of Conformity WAGO GmbH & Co. KG	-	-

Continued on next page

Approvals for marine applications

Approval	Standard	Certificate Name
ABS American Bureau of Shipping	-	23-2417173-PDA
DNV DNV GL SE	-	TAE000016Z
LR Lloyds Register	IEC 61984	96/20035 (E5)

Downloads

Environmental Product Compliance

Compliance Search

Environmental Product Compliance 272-131

Documentation

Additional Information

Technical Section	03.04.2019	pdf 2027.26 KB

CAD/CAE-Data

CAE data

EPLAN Data Portal 272-131

WSCAD Universe 272-131

1 Compatible Products

1.1 Optional Accessories

1.1.1 Marking

1.1.1.1 Marking device



Item No.: 210-110
Fiber-tip pen

Continued on next page

1.1.2 Tool

1.1.2.1 Operating tool

Item No.: 271-120
Push-button; white