Data Sheet | Item Number: 272-134/203-000

Power supply connector; without push-buttons; with snap-in mounting feet; without ground contact; 4-pole; white

https://www.wago.com/272-134/203-000

DISCONTINUED: 15.12.2026

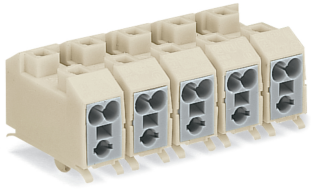

Color: white

Similar to illustration

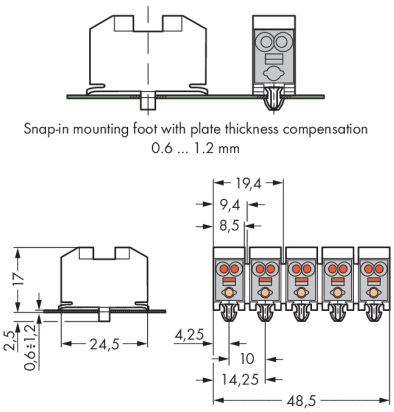

Dimensions in mm

Field-wiring terminal block, 272 Series, white

This field-wiring terminal block (item number 272-134/203-000) is designed to connect conductors quickly and easily. Strip lengths must be between 8 and 9 mm when connecting conductors to this field-wiring terminal block. Featuring one conductor terminal along with PUSH WIRE®, this product is highly versatile. Our PUSH WIRE® connection uses the stiffness of the conductor to overcome the clamping spring's contact force, allowing faster and easier conductor clamping. Dimensions: (38.5 x 19.5 x 24.5) mm (width x height x depth).

Electrical data

Ratings per	IEC/EN 60664-1		
Overvoltage category	III	III	II
Pollution degree	3	2	2
Nominal voltage	-	400 V	-
Rated impulse withstand voltage	-	4 kV	-
Rated current	-	18 A	-

Connection Data

Clamping units	16
Total number of potentials	4
Number of connection types	1

Connection 1

Connection technology	PUSH WIRE®
Strip length	8 ... 9 mm / 0.31 ... 0.35 inches
Pole number	4

Physical data

Width	38.5 mm / 1.516 inches
Height	19.5 mm / 0.767 inches
Depth	24.5 mm / 0.965 inches

Material data

Note (material data)	Information on material specifications can be found here
Color	white
Material group	I
Insulation material (main housing)	Polyamide (PA66)
Flammability class per UL94	V0
Fire load	0.197 MJ
Weight	13.7 g

Commercial data

Product Group	8 (Misc. Chassis Mount Blocks)
PU (SPU)	500 pcs
Packaging type	Bag
Country of origin	DE
GTIN	4044918430098
Customs tariff number	85369010000

Product Classification

UNSPSC	39121409
eCl@ss 10.0	27-14-11-04
eCl@ss 9.0	27-14-11-04
ETIM 9.0	EC000446
ETIM 10.0	EC000446
ECCN	NO US CLASSIFICATION

Environmental Product Compliance

RoHS Compliance Status	Compliant,No Exemption

Approvals / Certificates

General approvals

Approval	Standard	Certificate Name
CSA DEKRA Certification B.V.	C22.2 No. 158	70048844

Continued on next page

Downloads

Environmental Product Compliance

Compliance Search

Environmental Product Compliance 272-134/203-000

Documentation

Additional Information

Technical Section	03.04.2019	pdf 2027.26 KB

1 Compatible Products

1.1 Optional Accessories

1.1.1 Tool

1.1.1.1 Assembly tool



Item No.: 249-100
Operating tool; for terminal blocks with snap-in ground contact

1.1.1.2 Operating tool

Item No.: 271-120
Push-button; white