# Data Sheet | Item Number: 272-683/120-000

Power supply connector; without push-buttons; with snap-in mounting feet; without ground contact; 3-pole; white

https://www.wago.com/272-683/120-000

**DISCONTINUED: 15.12.2026**

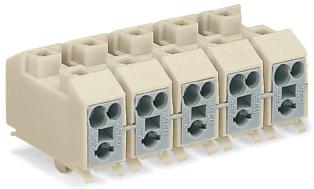

Color: white

Similar to illustration

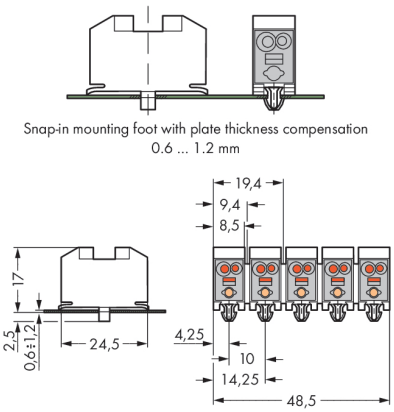


Dimensions in mm

Field-wiring terminal block, 272 Series, white

This field-wiring terminal block (item number 272-683/120-000) is designed for simple and secure connections. Ensure that the strip lengths are between 8 and 9 mm when connecting conductors to this field-wiring terminal block. This product incorporates one conductor terminal and utilizes PUSH WIRE®. Our PUSH WIRE® connection offers a quick and simple solution for connecting solid conductors. Dimensions: (28.5 x 19.5 x 24.5) mm (width x height x depth).

## Electrical data

| Ratings per | IEC/EN 60664-1 | | |
|---|---|---|---|
| Overvoltage category | III | III | II |
| Pollution degree | 3 | 2 | 2 |
| Nominal voltage | - | 400 V | - |
| Rated impulse withstand voltage | - | 4 kV | - |
| Rated current | - | 26 A | - |

## Connection Data

| | |
|---|---|
| Clamping units | 12 |
| Total number of potentials | 3 |
| Number of connection types | 1 |

### Connection 1

| | |
|---|---|
| Connection technology | PUSH WIRE® |
| Strip length | 8 ... 9 mm / 0.31 ... 0.35 inches |
| Pole number | 3 |

## Physical data

| | |
|---|---|
| Width | 28.5 mm / 1.122 inches |
| Height | 19.5 mm / 0.767 inches |
| Depth | 24.5 mm / 0.965 inches |

## Material data

| | |
|---|---|
| Note (material data) | Information on material specifications can be found here |
| Color | white |
| Material group | I |
| Insulation material (main housing) | Polyamide (PA66) |
| Flammability class per UL94 | V0 |
| Fire load | 0.147 MJ |
| Weight | 10.1 g |

## Commercial data

| | |
|---|---|
| Product Group | 8 (Misc. Chassis Mount Blocks) |
| PU (SPU) | 500 pcs |
| Packaging type | Bag |
| Country of origin | DE |
| GTIN | 4044918434669 |
| Customs tariff number | 85369010000 |

## Product Classification

| | |
|---|---|
| UNSPSC | 39121410 |
| eCl@ss 10.0 | 27-14-11-04 |
| eCl@ss 9.0 | 27-14-11-04 |
| ETIM 9.0 | EC000446 |
| ETIM 10.0 | EC000446 |
| ECCN | NO US CLASSIFICATION |

## Environmental Product Compliance

| | |
|---|---|
| RoHS Compliance Status | Compliant,No Exemption |

## Approvals / Certificates

### General approvals

| Approval | Standard | Certificate Name |
|---|---|---|
| CSA<br>DEKRA Certification B.V. | C22.2 No. 158 | 70048844 |


Continued on next page

## Downloads

### Environmental Product Compliance

**Compliance Search**

Environmental Product Compliance 272-683/120-000

### Documentation

**Additional Information**

| | | |
|---|---|---|
| Technical Section | 03.04.2019 | pdf 2027.26 KB |

## 1 Compatible Products

### 1.1 Optional Accessories

#### 1.1.1 Installation

##### 1.1.1.1 Mounting accessories





Item No.: 271-702
Pins; white

Item No.: 271-711
Pins; white

Item No.: 271-712
Pins; white

#### 1.1.2 Tool

##### 1.1.2.1 Operating tool



Item No.: 271-120
Push-button; white