Data Sheet | Item Number: 2759-245/211-1000

Library Controller Redundancy Master; Single License; Online activation

https://www.wago.com/2759-245/211-1000

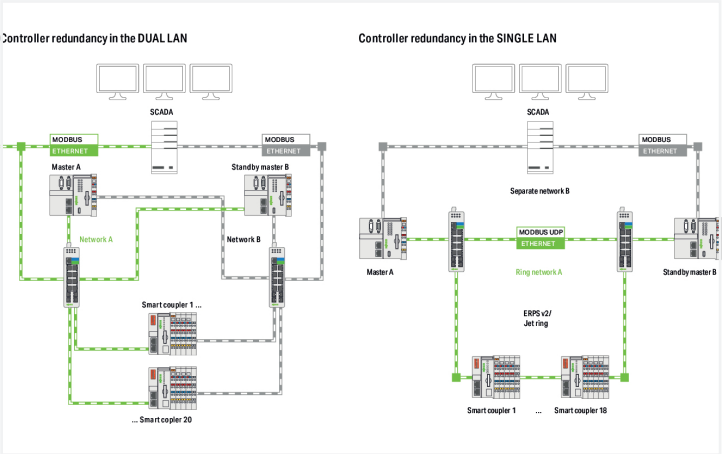

Description:

Increase availability in central ship alarm systems with WAGO's Application-Based Controller Redundancy (ACR).
The licensed software library (2759-245/211-1000) and an CODESYS
redundancy framework allows you to easily program and operate redundant
master PLCs in single point of failure (SPOF) tolerant systems.
A large number of the available 750 Series I/O Modules can be integrated into the system via Smart Couplers. These decentralized PLCs automatically recognize the input and output modules, which makes commissioning easy. The redundant communication of the two Master PLCs and the Smart Couplers is performed either via two separate networks (Dual-LAN) or a ring topology.
These Master PLCs (2nd generation PFC200) communicate with higher-level SCADA systems, for example, via the Modbus TCP protocol.
The application notes (a2020003 and a2020004) describe the practical use of the library and define the application area and the maximum number of participants within the system.

Advantages:

- Easy commissioning of the entire system with WAGO's standard hardware
- Simple/slow control loops can be mapped (Alarm & Monitoring, Data Acquisition, Slow Running Processes)
- Low switchover time (per marine classification society requirements)
- Use of complex modules such as HART or DALI

Benefits:

- With the application redundancy concept, WAGO provides you with a redundant framework for simple and economical system integration in ship technology.
- You save engineering effort and can focus on your application.

Licensing:

To use the "WagoAppRedundancyMaster.library," a "Library Controller Redundancy Master" license (2759-245/211-1000) must be purchased for each Master PLC. An SD card image in the redundancy framework is available for the Smart Couplers.

Use:

The license is registered in WAGO Upload and loaded onto a device. No other installation steps are required.

Note:

Register here to download the redundancy framework and test ACR free of charge for 30 days.

Software data

Supported devices	750-8212: PFC200; G2; 2ETH RS

Delivery

Delivery type	License certificate per email
License type (note)	A single license allows installation on one computer.
License type (note) (2)	A PC with both Internet connection and ***e!****COCKPIT* may be required for license activation.
License generation	DRM

Commercial data

PU (SPU)	1 pcs
Packaging type	not specified
Country of origin	QU
GTIN	4055143982825
Customs tariff number	88888888888

Product Classification

ETIM 10.0	EC001435
UNSPSC	43232402
ETIM 9.0	EC001435
ECCN	NO US CLASSIFICATION

Environmental Product Compliance

RoHS Compliance Status	Compliant,No Exemption

Downloads

Documentation

System Description

Solutions, General Product Information	pdf 321.72 KB	