Data Sheet | Item Number: 279-673/281-410

Component terminal block; 3-conductor; with diode 1N4007; anode, left side; for DIN-rail 35 x 15 and 35 x 7.5; 1.5 mm²; CAGE CLAMP®; gray

https://www.wago.com/279-673/281-410

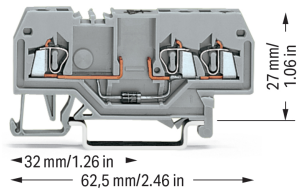

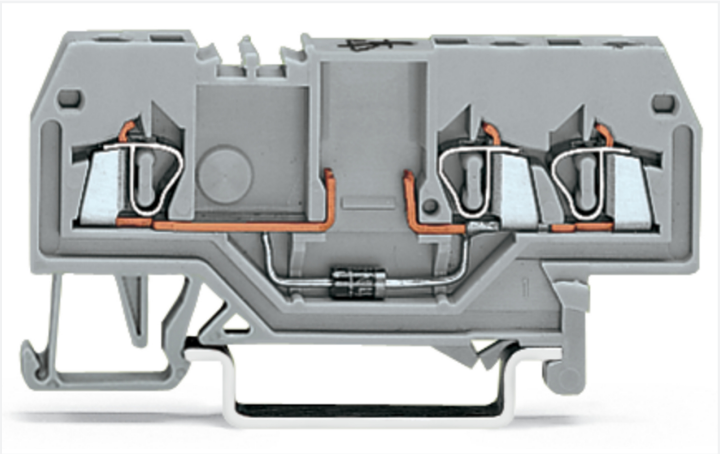

Color: gray

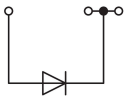

Component terminal block with diode, 279 Series, operating tool

Easily, quickly and safely connect conductors with this component terminal block with diode (item number 279-673/281-410). Conductors should only be connected to this component terminal block with diode if their strip length is between 8 and 9 mm . This product incorporates conductor terminals and utilizes CAGE CLAMP®. Our reliable and maintenance-free CAGE CLAMP® connection makes it easy to connect all conductor types without having to prepare the conductor. For example, you don't need to crimp ferrules. Dimensions: (4 x 62.5 x 31.5) mm (width x height x depth). This component terminal block with diode is suitable for conductor cross sections ranging from 0.08 mm² to 1.5 mm².

Electrical data

Ratings per	IEC/EN 60947-7-1		
Overvoltage category	III	III	II
Pollution degree	3	2	2
Nominal voltage	-	-	-
Rated impulse withstand voltage	-	-	-
Rated current	-	-	-

General information	
Nominal voltage	250 V
Reverse voltage	1000 V
Number/type of diode/LED	with 1N4007 diode
Wiring direction	Front-entry wiring
Alignment	Left-side anode

Connection Data

Clamping units	3
Total number of potentials	1
Number of levels	1

Connection 1

Connection technology	CAGE CLAMP®
Actuation type	Operating tool
Connectable conductor materials	Copper
Solid conductor	0.08 … 1.5 mm² / 28 … 16 AWG
Fine-stranded conductor	0.08 … 1.5 mm² / 28 … 16 AWG
Strip length	8 … 9 mm / 0.31 … 0.35 inches
Wiring direction	Front-entry wiring

Physical data

Width	4 mm / 0.157 inches
Height	62.5 mm / 2.461 inches
Depth from upper-edge of DIN-rail	27 mm / 1.063 inches
Depth	31.5 mm / 1.24 inches

Mechanical data

Design	horizontal type
Mounting type	DIN-35 rail
Marking level	Center marking

Material data

Note (material data)	Information on material specifications can be found here
Color	gray
Material group	I
Insulation material (main housing)	Polyamide (PA66)
Flammability class per UL94	V0
Fire load	0.108 MJ
Weight	5.7 g

Environmental requirements

Processing temperature	-35 … +85 °C
Continuous operating temperature	-60 … +105 °C

Commercial data

Product Group	1 (Rail Mounted Terminal Blocks)
PU (SPU)	100 pcs
Packaging type	Box
Country of origin	DE
GTIN	4045454193997
Customs tariff number	85369010000

Continued on next page

Product Classification

UNSPSC	39121410
eCl@ss 10.0	27-14-11-27
eCl@ss 9.0	27-14-11-27
ETIM 9.0	EC000903
ETIM 10.0	EC000903
ECCN	NO US CLASSIFICATION

Environmental Product Compliance

CAS-No.	7439-92-1 79-94-7
REACH Candidate List Substance	2,2',6,6'-tetrabromo-4,4'-isopropylidenediphenol Lead
RoHS Compliance Status	Compliant,With Exemption
RoHS Exemption	7(a)
SCIP notification number (Austria)	c169c407-010f-40d4-b8d9-0c33cee0672d
SCIP notification number (Belgium)	86236cd3-fb00-452e-b268-90bb21ae866f
SCIP notification number (Bulgaria)	81ede544-2c98-4db1-937d-7fd406e8c633
SCIP notification number (Czech Republic)	985365f2-9078-42e7-b260-abe120065fe4
SCIP notification number (Denmark)	509b33f4-0491-4f8f-8a5f-32d44b4dc8ae
SCIP notification number (Finland)	6a74906a-5806-454c-bd88-130eb84c33fe
SCIP notification number (France)	eb5c0663-3205-457a-9f77-d772496eaa31
SCIP notification number (Germany)	fdaf7a03-ef3c-4d7e-b20a-e889e09aac7e
SCIP notification number (Hungary)	33a2ac0f-1bab-471b-8707-692fa6ce6e0a
SCIP notification number (Italy)	c28c04c1-7a42-4f7f-8af4-150642955fc9
SCIP notification number (Netherlands)	2653b342-288b-44b6-a408-9028a7160140
SCIP notification number (Poland)	006f2126-03f2-4644-9fe1-73d6ceb0cb2f
SCIP notification number (Romania)	599d94d2-ab99-492e-845d-3a43e6c53798
SCIP notification number (Sweden)	cde2fb2f-a9fa-436f-8ac2-ffb59deba777

Approvals / Certificates

Declarations of conformity and manufacturer's declarations

Approval	Standard	Certificate Name
EU-Declaration of Conformity WAGO GmbH & Co. KG	-	-
UK-Declaration of Conformity WAGO GmbH & Co. KG	-	-

Continued on next page

Downloads

Environmental Product Compliance

Compliance Search

Environmental Product Compliance 279-673/281-410

Documentation

Bid Text

279-673/281-410	19.02.2019	xml 3.23 KB
279-673/281-410	10.04.2017	doc 24.50 KB

CAD/CAE-Data

CAD data

2D/3D Models 279-673/281-410

CAE data

EPLAN Data Portal 279-673/281-410

WSCAD Universe 279-673/281-410

ZUKEN Portal 279-673/281-410

1 Compatible Products

1.1 Required Accessories

1.1.1 End plate

1.1.1.1 End plate



Item No.: 279-308
End and intermediate plate; 2 mm thick; gray



Item No.: 279-339
End and intermediate plate; 2 mm thick; orange



Item No.: 279-309
Separator plate; 2 mm thick; oversized; gray



Item No.: 279-340
Separator plate; 2 mm thick; oversized; orange

1.2 Optional Accessories

1.2.1 DIN-rail

1.2.1.1 Mounting accessories



Item No.: 210-196
Aluminum carrier rail; 35 x 8.2 mm; 1.6 mm thick; 2 m long; unslotted; similar to EN 60715; silver-colored



Item No.: 210-198
Copper carrier rail; 35 x 15 mm; 2.3 mm thick; 2 m long; unslotted; according to EN 60715; copper-colored



Item No.: 210-508
Steel carrier rail; 35 x 15 mm; 1.5 mm thick; 2 m long; slotted; galvanized; similar to EN 60715; silver-colored



Item No.: 210-197
Steel carrier rail; 35 x 15 mm; 1.5 mm thick; 2 m long; slotted; similar to EN 60715; silver-colored

Continued on next page

1.2.1.1 Mounting accessories



Item No.: 210-506
Steel carrier rail; 35 x 15 mm; 1.5 mm thick; 2 m long; unslotted; galvanized; similar to EN 60715; silver-colored



Item No.: 210-114
Steel carrier rail; 35 x 15 mm; 1.5 mm thick; 2 m long; unslotted; similar to EN 60715; silver-colored



Item No.: 210-118
Steel carrier rail; 35 x 15 mm; 2.3 mm thick; 2 m long; unslotted; according to EN 60715; silver-colored



Item No.: 210-115
Steel carrier rail; 35 x 7.5 mm; 1 mm thick; 2 m long; slotted; according to EN 60715; "Hole width 18 mm; silver-colored



Item No.: 210-112
Steel carrier rail; 35 x 7.5 mm; 1 mm thick; 2 m long; slotted; according to EN 60715; "Hole width 25 mm; silver-colored



Item No.: 210-504
Steel carrier rail; 35 x 7.5 mm; 1 mm thick; 2 m long; slotted; galvanized; according to EN 60715; silver-colored



Item No.: 210-113
Steel carrier rail; 35 x 7.5 mm; 1 mm thick; 2 m long; unslotted; according to EN 60715; silver-colored



Item No.: 210-505
Steel carrier rail; 35 x 7.5 mm; 1 mm thick; 2 m long; unslotted; galvanized; according to EN 60715; silver-colored

1.2.2 Ferrule

1.2.2.1 Ferrule



Item No.: 216-301
Ferrule; Sleeve for 0.25 mm² / AWG 24; insulated; electro-tin plated; yellow

Item No.: 216-302
Ferrule; Sleeve for 0.34 mm² / 22 AWG; insulated; electro-tin plated; light turquoise

Item No.: 216-201
Ferrule; Sleeve for 0.5 mm² / 20 AWG; insulated; electro-tin plated; electrolytic copper; acc. to DIN 46228, Part 4/09.90; white



Item No.: 216-101
Ferrule; Sleeve for 0.5 mm² / AWG 22; uninsulated; electro-tin plated; silver-colored

Item No.: 216-202
Ferrule; Sleeve for 0.75 mm² / 18 AWG; insulated; electro-tin plated; gray



Item No.: 216-102
Ferrule; Sleeve for 0.75 mm² / 18 AWG; uninsulated; electro-tin plated; silver-colored

Item No.: 216-203
Ferrule; Sleeve for 1 mm² / AWG 18; insulated; electro-tin plated; red



Item No.: 216-103
Ferrule; Sleeve for 1 mm² / AWG 18; uninsulated; electro-tin plated

1.2.3 Installation

1.2.3.1 Cover



Item No.: 709-153
Cover; Type 1; suitable for cover carrier, type 1; 1 m long; transparent

1.2.3.2 Mounting accessories



Item No.: 209-106
Mounting carrier; for isolated mounting on DIN 35 rails; gray



Item No.: 249-116
Screwless end stop; 6 mm wide; for DIN-rail 35 x 15 and 35 x 7.5; gray

1.2.4 Insulation stop

1.2.4.1 Insulation stop



Item No.: 279-470
Insulation stop; 0.08 - 0.2 mm² "s" (0.14 mm² "f-st"); 5 pieces/strip; white



Item No.: 279-471
Insulation stop; 0.25 mm²; 5 pieces/strip; dark gray

Continued on next page

1.2.5 Jumper

1.2.5.1 Jumper



Item No.: 279-490
Jumper; 10-way; insulated; gray



Item No.: 279-482
Jumper; 2-way; insulated; gray



Item No.: 279-492
Jumper; 2-way; insulated; gray

Item No.: 279-483
Jumper; 3-way; insulated; gray

1.2.6 Marking

1.2.6.1 Group marker carrier



Item No.: 249-105
Group marker carrier; gray

1.2.6.2 Marker



Item No.: 793-4501/000-006
WMB marking card; as card; stretchable 4 - 4.2 mm; plain; snap-on type; blue



Item No.: 793-4501/000-014
WMB marking card; as card; stretchable 4 - 4.2 mm; plain; snap-on type; brown



Item No.: 793-4501/000-007
WMB marking card; as card; stretchable 4 - 4.2 mm; plain; snap-on type; gray



Item No.: 793-4501/000-023
WMB marking card; as card; stretchable 4 - 4.2 mm; plain; snap-on type; green



Item No.: 793-4501/000-017
WMB marking card; as card; stretchable 4 - 4.2 mm; plain; snap-on type; light green



Item No.: 793-4501/000-012
WMB marking card; as card; stretchable 4 - 4.2 mm; plain; snap-on type; orange



Item No.: 793-4501/000-005
WMB marking card; as card; stretchable 4 - 4.2 mm; plain; snap-on type; red



Item No.: 793-4501/000-024
WMB marking card; as card; stretchable 4 - 4.2 mm; plain; snap-on type; violet

Item No.: 793-4501
WMB marking card; as card; stretchable 4 - 4.2 mm; plain; snap-on type; white



Item No.: 793-4501/000-002
WMB marking card; as card; stretchable 4 - 4.2 mm; plain; snap-on type; yellow



Item No.: 2009-114/000-006
WMB-Inline; for Smart Printer; 2000 pieces on roll; stretchable 4 - 4.2 mm; plain; snap-on type; blue



Item No.: 2009-114/000-007
WMB-Inline; for Smart Printer; 2000 pieces on roll; stretchable 4 - 4.2 mm; plain; snap-on type; gray



Item No.: 2009-114/000-023
WMB-Inline; for Smart Printer; 2000 pieces on roll; stretchable 4 - 4.2 mm; plain; snap-on type; green



Item No.: 2009-114/000-012
WMB-Inline; for Smart Printer; 2000 pieces on roll; stretchable 4 - 4.2 mm; plain; snap-on type; orange



Item No.: 2009-114/000-005
WMB-Inline; for Smart Printer; 2000 pieces on roll; stretchable 4 - 4.2 mm; plain; snap-on type; red



Item No.: 2009-114/000-024
WMB-Inline; for Smart Printer; 2000 pieces on roll; stretchable 4 - 4.2 mm; plain; snap-on type; violet



Item No.: 2009-114
WMB-Inline; for Smart Printer; 2000 pieces on roll; stretchable 4 - 4.2 mm; plain; snap-on type; white



Item No.: 2009-114/000-002
WMB-Inline; for Smart Printer; 2000 pieces on roll; stretchable 4 - 4.2 mm; plain; snap-on type; yellow

1.2.7 Protective warning marker

1.2.7.1 Cover



Item No.: 279-415
Protective warning marker; 5-pole; with high-voltage symbol, black; yellow

Continued on next page

1.2.8 Tool

1.2.8.1 Operating tool



Item No.: 210-719
Operating tool; Blade: 2.5 x 0.4 mm; with a partially insulated shaft



Item No.: 210-648
Operating tool; Blade: 2.5 x 0.4 mm; with a partially insulated shaft; angled; short



Item No.: 210-647
Operating tool; Blade: 2.5 x 0.4 mm; with a partially insulated shaft; multicoloured

Installation Notes

Commoning



Commoning using comb-style jumper bars: Push comb-style jumper bars down until fully inserted.



These diode terminal blocks have been specially developed for custom diode circuits, such as lamp test and collective fault signal circuits.



Polarized diode gates with a common cathode can be created using the following terminal blocks:
279-673/281-410 or 279-673/281-411