# Data Sheet | Item Number: 279-915/281-411

Component terminal block; 2-conductor; with diode 1N4007; anode, right side; for DIN-rail 35 x 15 and 35 x 7.5; 1.5 mm²; CAGE CLAMP®; gray

https://www.wago.com/279-915/281-411

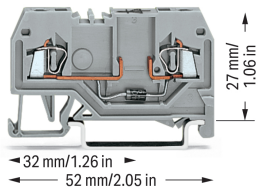


Color: gray

Similar to illustration

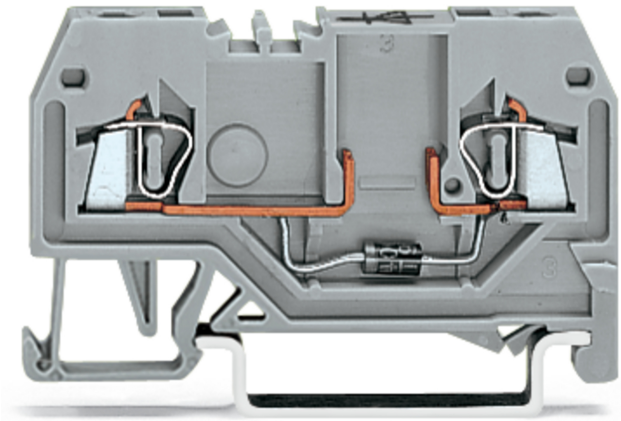

Similar to illustration

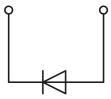

Component terminal block with diode, 279 Series, CAGE CLAMP®

This component terminal block with diode (item number 279-915/281-411) is designed for simple and secure connections. Conductors can only be connected to this component terminal block with diode if their strip length is between 8 and 9 mm . This product features conductor terminals and utilizes CAGE CLAMP®. Our highly-rated and maintenance-free CAGE CLAMP® connection makes it easy to connect all conductor types without having to prepare the conductor. For example, you don't need to crimp ferrules. The item's dimensions are (4 x 52 x 31.5) mm (width x height x depth). Depending on the type of conductor, this component terminal block with diode is suitable for conductor cross sections ranging from 0.08 mm² to 1.5 mm².

## Electrical data

| Ratings per | IEC/EN 60947-7-1 | | |
|---|---|---|---|
| Overvoltage category | III | III | II |
| Pollution degree | 3 | 2 | 2 |
| Nominal voltage | - | - | - |
| Rated impulse withstand voltage | - | - | - |
| Rated current | - | - | - |

| General information | |
|---|---|
| Nominal voltage | 250 V |
| Reverse voltage | 1000 V |
| Number/type of diode/LED | with 1N4007 diode |
| Wiring direction | Front-entry wiring |
| Alignment | Right-side anode |

## Connection Data

| | |
|---|---|
| Clamping units | 2 |
| Total number of potentials | 1 |
| Number of levels | 1 |

### Connection 1

| | |
|---|---|
| Connection technology | CAGE CLAMP® |
| Actuation type | Operating tool |
| Connectable conductor materials | Copper |
| Solid conductor | 0.08 … 1.5 mm² / 28 … 16 AWG |
| Fine-stranded conductor | 0.08 … 1.5 mm² / 28 … 16 AWG |
| Strip length | 8 … 9 mm / 0.31 … 0.35 inches |
| Wiring direction | Front-entry wiring |

## Physical data

| | |
|---|---|
| Width | 4 mm / 0.157 inches |
| Height | 52 mm / 2.047 inches |
| Depth from upper-edge of DIN-rail | 27 mm / 1.063 inches |
| Depth | 31.5 mm / 1.24 inches |

## Mechanical data

| | |
|---|---|
| Design | horizontal type |
| Mounting type | DIN-35 rail |
| Marking level | Center marking |

## Material data

| | |
|---|---|
| Note (material data) | Information on material specifications can be found here |
| Color | gray |
| Material group | I |
| Insulation material (main housing) | Polyamide (PA66) |
| Flammability class per UL94 | V0 |
| Fire load | 0.091 MJ |
| Weight | 4.6 g |

## Environmental requirements

| | |
|---|---|
| Processing temperature | -35 … +85 °C |
| Continuous operating temperature | -60 … +105 °C |

## Commercial data

| | |
|---|---|
| Product Group | 1 (Rail Mounted Terminal Blocks) |
| PU (SPU) | 100 pcs |
| Packaging type | Box |
| Country of origin | DE |
| GTIN | 4044918525466 |
| Customs tariff number | 85369010000 |


Continued on next page

## Product Classification

| | |
|---|---|
| UNSPSC | 39121410 |
| eCl@ss 10.0 | 27-14-11-27 |
| eCl@ss 9.0 | 27-14-11-27 |
| ETIM 9.0 | EC000903 |
| ETIM 10.0 | EC000903 |
| ECCN | NO US CLASSIFICATION |

## Environmental Product Compliance

| | |
|---|---|
| CAS-No. | 7439-92-1<br>79-94-7 |
| REACH Candidate List Substance | 2,2',6,6'-tetrabromo-4,4'-isopropylidenediphenol<br>Lead |
| RoHS Compliance Status | Compliant,With Exemption |
| RoHS Exemption | 7(a) |
| SCIP notification number (Austria) | 56279a61-3d6a-4274-a2e7-17c165ad4c31 |
| SCIP notification number (Belgium) | 1be89762-3a00-4343-bd7b-3e1e9d9a9d11 |
| SCIP notification number (Bulgaria) | 0504aec5-01c9-4be2-bafe-6b24bbfa6794 |
| SCIP notification number (Czech Republic) | 5d02ba5d-4133-4c39-ae13-6a7f1dba605e |
| SCIP notification number (Denmark) | 494e94f8-4dd5-4675-b319-079192a3b6d9 |
| SCIP notification number (Finland) | 8d3d088e-1596-4bd6-9280-2144322faf35 |
| SCIP notification number (France) | 039562f8-d1df-496f-9573-f70603d470ae |
| SCIP notification number (Germany) | 93406e92-8416-478c-85f8-214f6646ad2c |
| SCIP notification number (Hungary) | c4d1c392-cf93-4a9d-aab8-7476ee36ad80 |
| SCIP notification number (Italy) | ac041af0-06cf-4fdf-990f-1c162be04386 |
| SCIP notification number (Netherlands) | 55f44714-1068-4bb3-8cd5-f76dbb6f1297 |
| SCIP notification number (Poland) | 786d431c-936b-48ec-a246-304c6f640954 |
| SCIP notification number (Romania) | 5a271a66-240c-4ff7-ad6b-e177a0c6b837 |
| SCIP notification number (Sweden) | 79e87172-a9de-4260-aced-3be0e85028df |

## Approvals / Certificates

### Declarations of conformity and manufacturer's declarations

| Approval | Standard | Certificate Name |
|---|---|---|
| EU-Declaration of Conformity<br>WAGO GmbH & Co. KG | - | - |
| UK-Declaration of Conformity<br>WAGO GmbH & Co. KG | - | - |


Continued on next page

## Downloads

### Environmental Product Compliance

**Compliance Search**

Environmental Product Compliance 279-915/281-411

### Documentation

**Bid Text**

| | | |
|---|---|---|
| 279-915/281-411 | 19.02.2019 | xml 3.22 KB |
| 279-915/281-411 | 10.04.2017 | doc 24.50 KB |

### CAD/CAE-Data

**CAD data**

2D/3D Models 279-915/281-411

**CAE data**

EPLAN Data Portal 279-915/281-411

WSCAD Universe 279-915/281-411

ZUKEN Portal 279-915/281-411

## 1 Compatible Products

### 1.1 Required Accessories

#### 1.1.1 End plate

##### 1.1.1.1 End plate



Item No.: 279-325
End and intermediate plate; 2 mm thick; gray



Item No.: 279-328
End and intermediate plate; 2 mm thick; orange



Item No.: 279-326
Separator plate; 2 mm thick; oversized; gray



Item No.: 279-329
Separator plate; 2 mm thick; oversized; orange

### 1.2 Optional Accessories

#### 1.2.1 DIN-rail

##### 1.2.1.1 Mounting accessories



Item No.: 210-196
Aluminum carrier rail; 35 x 8.2 mm; 1.6 mm thick; 2 m long; unslotted; similar to EN 60715; silver-colored



Item No.: 210-198
Copper carrier rail; 35 x 15 mm; 2.3 mm thick; 2 m long; unslotted; according to EN 60715; copper-colored



Item No.: 210-508
Steel carrier rail; 35 x 15 mm; 1.5 mm thick; 2 m long; slotted; galvanized; similar to EN 60715; silver-colored



Item No.: 210-197
Steel carrier rail; 35 x 15 mm; 1.5 mm thick; 2 m long; slotted; similar to EN 60715; silver-colored


Continued on next page

### 1.2.1.1 Mounting accessories



Item No.: 210-506
Steel carrier rail; 35 x 15 mm; 1.5 mm thick; 2 m long; unslotted; galvanized; similar to EN 60715; silver-colored



Item No.: 210-114
Steel carrier rail; 35 x 15 mm; 1.5 mm thick; 2 m long; unslotted; similar to EN 60715; silver-colored



Item No.: 210-118
Steel carrier rail; 35 x 15 mm; 2.3 mm thick; 2 m long; unslotted; according to EN 60715; silver-colored



Item No.: 210-115
Steel carrier rail; 35 x 7.5 mm; 1 mm thick; 2 m long; slotted; according to EN 60715; "Hole width 18 mm; silver-colored



Item No.: 210-112
Steel carrier rail; 35 x 7.5 mm; 1 mm thick; 2 m long; slotted; according to EN 60715; "Hole width 25 mm; silver-colored



Item No.: 210-504
Steel carrier rail; 35 x 7.5 mm; 1 mm thick; 2 m long; slotted; galvanized; according to EN 60715; silver-colored



Item No.: 210-113
Steel carrier rail; 35 x 7.5 mm; 1 mm thick; 2 m long; unslotted; according to EN 60715; silver-colored



Item No.: 210-505
Steel carrier rail; 35 x 7.5 mm; 1 mm thick; 2 m long; unslotted; galvanized; according to EN 60715; silver-colored

## 1.2.2 Ferrule

### 1.2.2.1 Ferrule



Item No.: 216-301
Ferrule; Sleeve for 0.25 mm² / AWG 24; insulated; electro-tin plated; yellow



Item No.: 216-302
Ferrule; Sleeve for 0.34 mm² / 22 AWG; insulated; electro-tin plated; light turquoise



Item No.: 216-201
Ferrule; Sleeve for 0.5 mm² / 20 AWG; insulated; electro-tin plated; electrolytic copper; acc. to DIN 46228, Part 4/09.90; white



Item No.: 216-101
Ferrule; Sleeve for 0.5 mm² / AWG 22; uninsulated; electro-tin plated; silver-colored



Item No.: 216-202
Ferrule; Sleeve for 0.75 mm² / 18 AWG; insulated; electro-tin plated; gray



Item No.: 216-102
Ferrule; Sleeve for 0.75 mm² / 18 AWG; uninsulated; electro-tin plated; silver-colored



Item No.: 216-203
Ferrule; Sleeve for 1 mm² / AWG 18; insulated; electro-tin plated; red



Item No.: 216-103
Ferrule; Sleeve for 1 mm² / AWG 18; uninsulated; electro-tin plated

## 1.2.3 Installation

### 1.2.3.1 Cover



Item No.: 709-153
Cover; Type 1; suitable for cover carrier, type 1; 1 m long; transparent

### 1.2.3.2 Cover carrier



Item No.: 709-167
Cover carrier; Type 1; incl. fixing/retaining screws and knurled nut; suitable for 279 to 282 and 880 Series rail-mounted terminal blocks; suitable for 264 Series miniature rail-mounted terminal blocks; suitable for 270 Series sensor and actuator terminal blocks; gray


Continued on next page

### 1.2.3.3 Mounting accessories



Item No.: 209-106
Mounting carrier; for isolated mounting on DIN 35 rails; gray



Item No.: 249-116
Screwless end stop; 6 mm wide; for DIN-rail 35 x 15 and 35 x 7.5; gray

## 1.2.4 Insulation stop

### 1.2.4.1 Insulation stop



Item No.: 279-470
Insulation stop; 0.08 - 0.2 mm² "s" (0.14 mm² "f-st"); 5 pieces/strip; white



Item No.: 279-471
Insulation stop; 0.25 mm²; 5 pieces/strip; dark gray

## 1.2.5 Jumper

### 1.2.5.1 Jumper



Item No.: 279-490
Jumper; 10-way; insulated; gray



Item No.: 279-482
Jumper; 2-way; insulated; gray



Item No.: 279-492
Jumper; 2-way; insulated; gray



Item No.: 279-483
Jumper; 3-way; insulated; gray

## 1.2.6 Marking

### 1.2.6.1 Group marker carrier



Item No.: 249-105
Group marker carrier; gray

### 1.2.6.2 Marker



Item No.: 793-4501/000-006
WMB marking card; as card; stretchable 4 - 4.2 mm; plain; snap-on type; blue



Item No.: 793-4501/000-014
WMB marking card; as card; stretchable 4 - 4.2 mm; plain; snap-on type; brown



Item No.: 793-4501/000-007
WMB marking card; as card; stretchable 4 - 4.2 mm; plain; snap-on type; gray



Item No.: 793-4501/000-023
WMB marking card; as card; stretchable 4 - 4.2 mm; plain; snap-on type; green



Item No.: 793-4501/000-017
WMB marking card; as card; stretchable 4 - 4.2 mm; plain; snap-on type; light green



Item No.: 793-4501/000-012
WMB marking card; as card; stretchable 4 - 4.2 mm; plain; snap-on type; orange



Item No.: 793-4501/000-005
WMB marking card; as card; stretchable 4 - 4.2 mm; plain; snap-on type; red



Item No.: 793-4501/000-024
WMB marking card; as card; stretchable 4 - 4.2 mm; plain; snap-on type; violet



Item No.: 793-4501
WMB marking card; as card; stretchable 4 - 4.2 mm; plain; snap-on type; white



Item No.: 793-4501/000-002
WMB marking card; as card; stretchable 4 - 4.2 mm; plain; snap-on type; yellow



Item No.: 2009-114/000-006
WMB-Inline; for Smart Printer; 2000 pieces on roll; stretchable 4 - 4.2 mm; plain; snap-on type; blue



Item No.: 2009-114/000-007
WMB-Inline; for Smart Printer; 2000 pieces on roll; stretchable 4 - 4.2 mm; plain; snap-on type; gray



Item No.: 2009-114/000-023
WMB-Inline; for Smart Printer; 2000 pieces on roll; stretchable 4 - 4.2 mm; plain; snap-on type; green



Item No.: 2009-114/000-012
WMB-Inline; for Smart Printer; 2000 pieces on roll; stretchable 4 - 4.2 mm; plain; snap-on type; orange



Item No.: 2009-114/000-005
WMB-Inline; for Smart Printer; 2000 pieces on roll; stretchable 4 - 4.2 mm; plain; snap-on type; red



Item No.: 2009-114/000-024
WMB-Inline; for Smart Printer; 2000 pieces on roll; stretchable 4 - 4.2 mm; plain; snap-on type; violet


Continued on next page

### 1.2.6.2 Marker



Item No.: 2009-114
WMB-Inline; for Smart Printer; 2000 pieces on roll; stretchable 4 - 4.2 mm; plain; snap-on type; white



Item No.: 2009-114/000-002
WMB-Inline; for Smart Printer; 2000 pieces on roll; stretchable 4 - 4.2 mm; plain; snap-on type; yellow

## 1.2.7 Protective warning marker

### 1.2.7.1 Cover



Item No.: 279-415
Protective warning marker; 5-pole; with high-voltage symbol, black; yellow

## 1.2.8 Tool

### 1.2.8.1 Operating tool



Item No.: 210-719
Operating tool; Blade: 2.5 x 0.4 mm; with a partially insulated shaft



Item No.: 210-648
Operating tool; Blade: 2.5 x 0.4 mm; with a partially insulated shaft; angled; short



Item No.: 210-647
Operating tool; Blade: 2.5 x 0.4 mm; with a partially insulated shaft; multicoloured

## Installation Notes

### Commoning



Commoning using comb-style jumper bars: Push comb-style jumper bars down until fully inserted.



These diode terminal blocks have been specially developed for custom diode circuits, such as lamp test and collective fault signal circuits.


Continued on next page



Open diode gates can be created using the following terminal blocks:
279-915/281-410 or 279-915/281-411