# Data Sheet | Item Number: 280-502/281-605

Component terminal block; double-deck; with direct connection to DIN rail; with BZW06-B TVS diode; 110 VDC; for DIN-rail 35 x 15 and 35 x 7.5; 2.5 mm²; CAGE CLAMP®; gray

https://www.wago.com/280-502/281-605

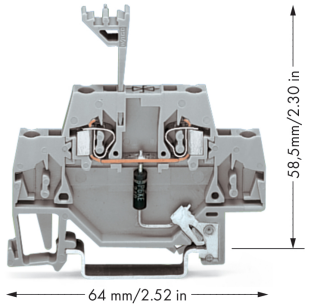


Color: gray

Similar to illustration

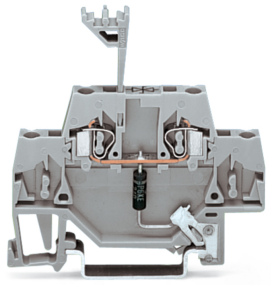

Similar to illustration

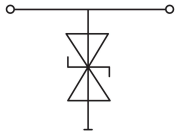

**Short description:**
WAGO's component terminal block with single-stage surge suppression device and direct connection to DIN-35 rail is equipped with a TVS diode.

**Features:**

- Protect your system against overvoltage
- Slim, space-saving design
- Control operational costs by preventing expensive, unplanned downtime
- High operational reliability and system uptime

## Notes

| | |
|---|---|
| Safety Information | - Installation must be performed by qualified personnel only.<br>- The DIN-rail must be grounded.<br>- The input current must be protected by a suitable fuse.<br>- Protection against contact with stored charges must be ensured.<br>- Do not insert or remove pluggable modules when energized.<br>- The IP20 protection rating must be maintained in the assembled state or when using an end/intermediate plate compatible with the rail-mount terminal block. |

## Electrical data

| | |
|---|---|
| Nominal operating voltage | 110 VDC |
| Maximum continuous voltage | 136 VDC |
| Rated continuous current | 20 A |
| Nominal discharge current (10/1000 µs) (line) | 2.7 A |
| Protection level (10/1000 µs) | ≤ 219 VDC |
| Capacitance | ≤ 400 pF |

## Connection Data

| | |
|---|---|
| Connections (number) | 2 |
| Connection technology | CAGE CLAMP® |
| Solid conductor | 0.08 … 2.5 mm² / 28 … 14 AWG |
| Fine-stranded conductor | 0.08 … 2.5 mm² / 28 … 14 AWG |
| Strip length | 8 … 9 mm / 0.31 … 0.35 inches |

## Physical data

| | |
|---|---|
| Width | 5 mm / 0.197 inches |
| Height | 64 mm / 2.52 inches |
| Depth from upper-edge of DIN-rail | 58.5 mm / 2.303 inches |

## Mechanical data

| | |
|---|---|
| Design | with direct connection to DIN-rail |
| Mounting type | DIN-35 rail |

## Material data

| | |
|---|---|
| Color | gray |
| Insulation material (main housing) | Polyamide (PA66) |
| Material group | I |
| Flammability class per UL94 | V0 |
| Fire load | 0.166 MJ |
| Weight | 8.1 g |

## Environmental requirements

| | |
|---|---|
| Processing temperature | -35 … +85 °C |

## Commercial data

| | |
|---|---|
| Product Group | 1 (Rail Mounted Terminal Blocks) |
| PU (SPU) | 50 (1) pcs |
| Packaging type | Box |
| Country of origin | DE |
| GTIN | 4045454585242 |
| Customs tariff number | 85369010000 |


Continued on next page

## Product Classification

| | |
|---|---|
| UNSPSC | 39121410 |
| eCl@ss 10.0 | 27-14-11-27 |
| eCl@ss 9.0 | 27-14-11-27 |
| ETIM 9.0 | EC000903 |
| ETIM 10.0 | EC000903 |
| ECCN | NO US CLASSIFICATION |

## Environmental Product Compliance

| | |
|---|---|
| CAS-No. | 7439-92-1<br>79-94-7 |
| REACH Candidate List Substance | 2,2',6,6'-tetrabromo-4,4'-isopropylidenediphenol<br>Lead |
| RoHS Compliance Status | Compliant,No Exemption |
| SCIP notification number (Austria) | 8c37e490-caa9-4d37-afcf-702be1b86977 |
| SCIP notification number (Belgium) | 981777d6-2425-4750-ad47-ecd9cc3fc94a |
| SCIP notification number (Bulgaria) | f6c3b289-a978-4dcf-9190-2277bc6b390e |
| SCIP notification number (Czech Republic) | 6c4b3c4b-5089-4949-869c-52cf4dd51e5b |
| SCIP notification number (Denmark) | 85684d61-b463-42e8-9774-fd051dd4e91c |
| SCIP notification number (Finland) | f154265c-33b1-437c-b211-a6a76c0b1bcb |
| SCIP notification number (France) | a0a1b4fe-819c-47a3-aebf-190ca48ef52c |
| SCIP notification number (Germany) | 89fcf099-f62c-435d-b984-4c93f0830334 |
| SCIP notification number (Hungary) | 21dd9e74-cf1a-4798-9e99-e4596169be22 |
| SCIP notification number (Italy) | 2d8f6a50-6a7f-4d1c-a6ba-bb743ff8d9ad |
| SCIP notification number (Netherlands) | 9a9e5d02-aa94-4b75-824b-7885dff59205 |
| SCIP notification number (Poland) | 4f98c7f3-89fa-45c6-a8ec-5108a85b156e |
| SCIP notification number (Romania) | 469f5381-d900-4e04-a792-1e27f2c63093 |
| SCIP notification number (Sweden) | 75825f23-ce0d-4c10-aa03-a1548a962b19 |

## Downloads

### Environmental Product Compliance

**Compliance Search**

| | |
|---|---|
| Environmental Product Compliance 280-502/281-605 | ⭳ |

### Documentation

**Bid Text**

| | | | |
|---|---|---|---|
| 280-502/281-605 | 19.02.2019 | xml<br>3.28 KB | ⭳ |
| 280-502/281-605 | 11.02.2015 | doc<br>25.00 KB | ⭳ |


Continued on next page

## CAD/CAE-Data

### CAD data

2D/3D Models
280-502/281-605

### CAE data

EPLAN Data Portal
280-502/281-605

WSCAD Universe
280-502/281-605

ZUKEN Portal
280-502/281-605

## 1 Compatible Products

### 1.1 Required Accessories

#### 1.1.1 End plate

##### 1.1.1.1 End plate



Item No.: 280-340
End and intermediate plate; 2.5 mm thick; gray



Item No.: 280-341
End and intermediate plate; 2.5 mm thick; orange

### 1.2 Optional Accessories

#### 1.2.1 Insulation stop

##### 1.2.1.1 Insulation stop



Item No.: 280-470
Insulation stop; 0.08 - 0.2 mm² "s" (0.14 mm² "f-st"); 5 pieces/strip; white



Item No.: 280-471
Insulation stop; 0.25 - 0.5 mm²; 5 pieces/strip; light gray



Item No.: 280-472
Insulation stop; 0.75 - 1 mm²; 5 pieces/strip; black

#### 1.2.2 Jumper

##### 1.2.2.1 Jumper



Item No.: 280-490
Jumper; 10-way; insulated; gray



Item No.: 280-482
Jumper; 2-way; insulated; gray



Item No.: 280-492
Jumper; 2-way; insulated; gray



Item No.: 280-483
Jumper; 3-way; insulated; gray



Item No.: 280-484
Jumper; 4-way; insulated; gray



Item No.: 280-485
Jumper; 5-way; insulated; gray


Continued on next page

## 1.2.3 Marking

### 1.2.3.1 Marker



Item No.: 793-502
WMB marking card; as card; MARKED; 1 … 10 (10x); not stretchable; Horizontal marking; snap-on type; white



Item No.: 793-503
WMB marking card; as card; MARKED; 11 … 20 (10x); not stretchable; Horizontal marking; snap-on type; white



Item No.: 793-504
WMB marking card; as card; MARKED; 21 … 30 (10x); not stretchable; Horizontal marking; snap-on type; white



Item No.: 793-505
WMB marking card; as card; MARKED; 31 … 40 (10x); not stretchable; Horizontal marking; snap-on type; white



Item No.: 793-506
WMB marking card; as card; MARKED; 41 … 50 (10x); not stretchable; Horizontal marking; snap-on type; white



Item No.: 793-501
WMB marking card; as card; not stretchable; plain; snap-on type; white



Item No.: 2009-115
WMB-Inline; for Smart Printer; 1500 pieces on roll; stretchable 5 - 5.2 mm; plain; snap-on type; white

## 1.2.4 Tool

### 1.2.4.1 Operating tool



Item No.: 210-720
Operating tool; Blade: 3.5 x 0.5 mm; with a partially insulated shaft; multicoloured