Data Sheet | Item Number: 280-503/281-579

Component terminal block; double-deck; with end plate; with gas-filled surge arrester; for DIN-rail 35 x 15 and 35 x 7.5; 2.5 mm²; CAGE CLAMP®; gray

https://www.wago.com/280-503/281-579

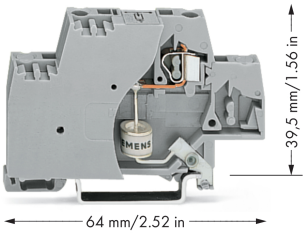

Color: gray

Similar to illustration

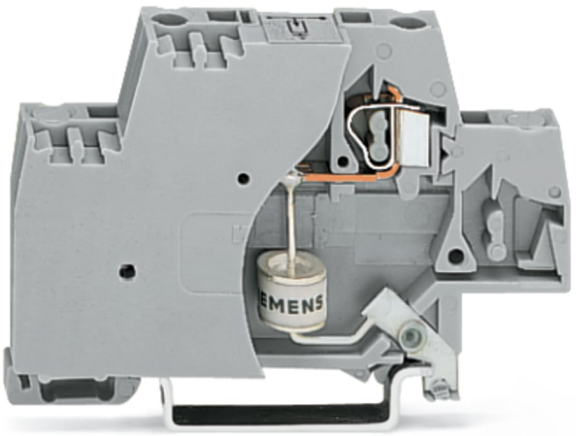

Similar to illustration

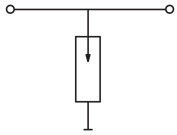

Short description:
This component terminal block with surge suppression device, end plate and direct connection to the DIN-35 rail is equipped with a gas-filled surge.

Features:

- Protect your system against overvoltage
- Slim, space-saving design
- Control operational costs by preventing expensive, unplanned downtime
- High operational reliability and system uptime

Notes

Safety Information	- Installation must be performed by qualified personnel only. - The DIN-rail must be grounded. - The input current must be protected by a suitable fuse. - Protection against contact with stored charges must be ensured. - Do not insert or remove pluggable modules when energized. - The IP20 protection rating must be maintained in the assembled state or when using an end/intermediate plate compatible with the rail-mount terminal block.

Electrical data

Nominal operating voltage	24 VAC/VDC
DC ignition voltage	72 … 108 V
Rated continuous current	20 A
Nominal discharge current (8/20 µs) (line)	5 kA
Protection level (8/20 µs)	≤ 600 VAC
Capacitance	≤ 2 pF

Connection Data

Connections (number)	2
Connection technology	CAGE CLAMP®
Solid conductor	0.08 … 2.5 mm² / 28 … 14 AWG
Fine-stranded conductor	0.08 … 2.5 mm² / 28 … 14 AWG
Strip length	8 … 9 mm / 0.31 … 0.35 inches

Physical data

Width	10 mm / 0.394 inches
Height	64 mm / 2.52 inches
Depth from upper-edge of DIN-rail	39.5 mm / 1.555 inches

Mechanical data

Design	with end plate; with direct connection to DIN-rail
Mounting type	DIN-35 rail

Material data

Color	gray
Insulation material (main housing)	Polyamide (PA66)
Material group	I
Flammability class per UL94	V0
Fire load	0.256 MJ
Weight	13 g

Environmental requirements

Processing temperature	-35 … +85 °C

Commercial data

Product Group	1 (Rail Mounted Terminal Blocks)
PU (SPU)	50 (1) pcs
Packaging type	Box
Country of origin	DE
GTIN	4045454194260
Customs tariff number	85369010000

Continued on next page

Product Classification

UNSPSC	39121410
eCl@ss 10.0	27-14-11-27
eCl@ss 9.0	27-14-11-27
ETIM 9.0	EC000903
ETIM 10.0	EC000903
ECCN	NO US CLASSIFICATION

Environmental Product Compliance

RoHS Compliance Status	Compliant,No Exemption

Approvals / Certificates

Declarations of conformity and manufacturer's declarations

Approval	Standard	Certificate Name
EU-Declaration of Conformity WAGO GmbH & Co. KG	-	-
UK-Declaration of Conformity WAGO GmbH & Co. KG	-	-

Downloads

Environmental Product Compliance

Compliance Search

Environmental Product Compliance
280-503/281-579

Documentation

Bid Text

280-503/281-579	19.02.2019	xml 3.31 KB
280-503/281-579	11.02.2015	doc 25.50 KB

CAD/CAE-Data

CAD data

2D/3D Models
280-503/281-579

CAE data

EPLAN Data Portal
280-503/281-579

WSCAD Universe
280-503/281-579

ZUKEN Portal
280-503/281-579

Continued on next page

1 Compatible Products

1.1 Optional Accessories

1.1.1 Insulation stop

1.1.1.1 Insulation stop



Item No.: 280-470
Insulation stop; 0.08 - 0.2 mm² "s" (0.14 mm² "f-st"); 5 pieces/strip; white



Item No.: 280-471
Insulation stop; 0.25 - 0.5 mm²; 5 pieces/strip; light gray



Item No.: 280-472
Insulation stop; 0.75 - 1 mm²; 5 pieces/strip; black

1.1.2 Jumper

1.1.2.1 Jumper



Item No.: 280-492
Jumper; 2-way; insulated; gray

1.1.3 Marking

1.1.3.1 Marker



Item No.: 2009-145
Mini-WSB Inline; for Smart Printer; 1700 pieces on roll; stretchable 5 - 5.2 mm; plain; snap-on type; white



Item No.: 248-501
Mini-WSB marking card; as card; not stretchable; plain; snap-on type; white

1.1.4 Tool

1.1.4.1 Operating tool



Item No.: 210-720
Operating tool; Blade: 3.5 x 0.5 mm; with a partially insulated shaft; multicoloured