Data Sheet | Item Number: 280-504/281-585

Component terminal block; double-deck; with end plate; with varistor; for DIN-rail 35 x 15 and 35 x 7.5; 2.5 mm²; CAGE CLAMP®; gray

https://www.wago.com/280-504/281-585

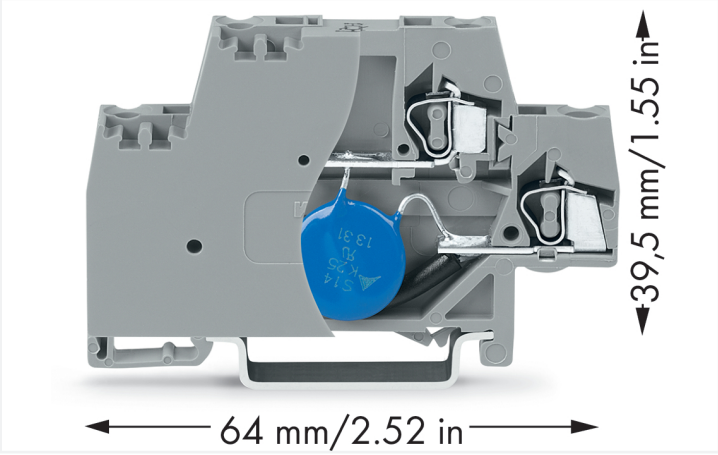

Color: gray

Similar to illustration

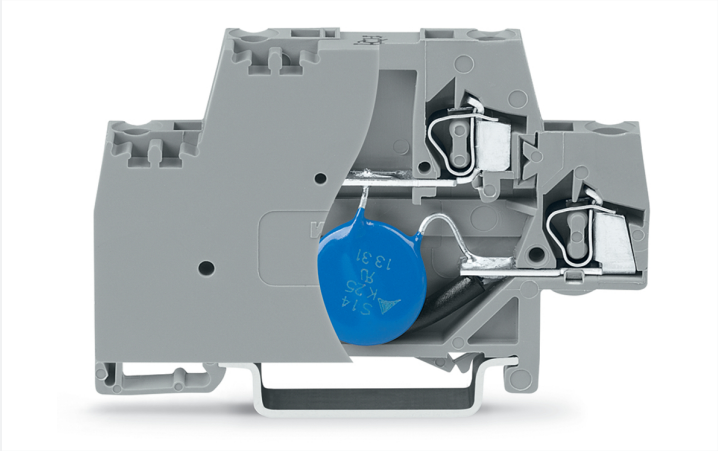

Similar to illustration

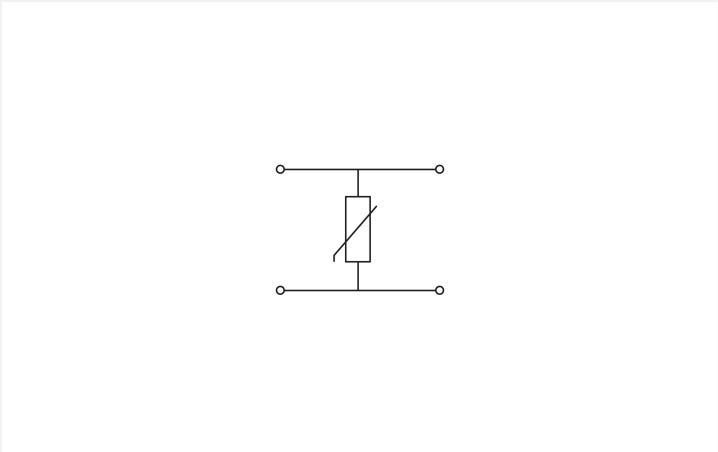

Short description:
This component terminal block with surge suppression device and end plate is equipped with a varistor.

Features:

- Protect your system against overvoltage
- Slim, space-saving design
- Control operational costs by preventing expensive, unplanned downtime
- High operational reliability and system uptime

Notes

Safety Information	- Installation must be performed by qualified personnel only. - The DIN-rail must be grounded. - The input current must be protected by a suitable fuse. - Protection against contact with stored charges must be ensured. - Do not insert or remove pluggable modules when energized. - The IP20 protection rating must be maintained in the assembled state or when using an end/intermediate plate compatible with the rail-mount terminal block.

Electrical data

Nominal operating voltage	110 VDC
Maximum continuous voltage	150 VDC
Rated continuous current	20 A
Nominal discharge current (8/20 µs) (line)	1 kA
Discharge current (max.)	4.5 kA
Protection level (8/20 µs)	≤ 300 VDC
Capacitance	≤ 800 pF

Safety and protection

Protection type	IP20

Connection Data

Wiring direction	Front-entry wiring
Connections (number)	4
Connection technology	CAGE CLAMP®
Solid conductor	0.08 … 2.5 mm² / 28 … 14 AWG
Fine-stranded conductor	0.08 … 2.5 mm² / 28 … 14 AWG
Strip length	8 … 9 mm / 0.31 … 0.35 inches

Physical data

Width	10 mm / 0.394 inches
Height	64 mm / 2.52 inches
Depth from upper-edge of DIN-rail	39.5 mm / 1.555 inches

Mechanical data

Design	with end plate
Mounting type	DIN-35 rail

Material data

Color	gray
Insulation material (main housing)	Polyamide (PA66)
Material group	I
Flammability class per UL94	V0
Fire load	1.324 MJ
Weight	15.1 g

Environmental requirements

Ambient temperature (operation)	-25 … +70 °C
Processing temperature	-35 … +85 °C
Operating altitude (max.)	2000 m

Continued on next page

Standards and Specifications

Standards/specifications	EN 60947-7-1 EN 60512-5-2

Commercial data

Product Group	1 (Rail Mounted Terminal Blocks)
PU (SPU)	50 (1) pcs
Packaging type	Box
Country of origin	DE
GTIN	4050821666059
Customs tariff number	85369010000

Product Classification

UNSPSC	39121410
eCl@ss 10.0	27-14-11-27
eCl@ss 9.0	27-14-11-27
ETIM 9.0	EC000903
ETIM 10.0	EC000903
ECCN	NO US CLASSIFICATION

Environmental Product Compliance

RoHS Compliance Status	Compliant,No Exemption

Approvals / Certificates

Declarations of conformity and manufacturer's declarations

Approval	Standard	Certificate Name
EU-Declaration of Conformity WAGO GmbH & Co. KG	-	-
UK-Declaration of Conformity WAGO GmbH & Co. KG	-	-

Downloads

Environmental Product Compliance

Compliance Search

Environmental Product Compliance
280-504/281-585

Continued on next page

Documentation

Bid Text

280-504/281-585	19.02.2019	xml 3.25 KB	
280-504/281-585	11.02.2015	doc 25.50 KB	

CAD/CAE-Data

CAD data

2D/3D Models
280-504/281-585

CAE data

EPLAN Data Portal
280-504/281-585

WSCAD Universe
280-504/281-585

ZUKEN Portal
280-504/281-585

1 Compatible Products

1.1 Optional Accessories

1.1.1 Insulation stop

1.1.1.1 Insulation stop



Item No.: 280-470
Insulation stop; 0.08 - 0.2 mm² "s" (0.14 mm² "f-st"); 5 pieces/strip; white



Item No.: 280-471
Insulation stop; 0.25 - 0.5 mm²; 5 pieces/strip; light gray



Item No.: 280-472
Insulation stop; 0.75 - 1 mm²; 5 pieces/strip; black

1.1.2 Jumper

1.1.2.1 Jumper



Item No.: 280-492
Jumper; 2-way; insulated; gray

1.1.3 Marking

1.1.3.1 Marker



Item No.: 2009-145
Mini-WSB Inline; for Smart Printer; 1700 pieces on roll; stretchable 5 - 5.2 mm; plain; snap-on type; white



Item No.: 248-501
Mini-WSB marking card; as card; not stretchable; plain; snap-on type; white

Continued on next page

1.1.4 Tool

1.1.4.1 Operating tool



Item No.: 210-720
Operating tool; Blade: 3.5 x 0.5 mm; with a partially insulated shaft; multicoloured