Data Sheet | Item Number: 280-803/281-418

Component plug; 2-pole; 10 mm wide; gray

https://www.wago.com/280-803/281-418

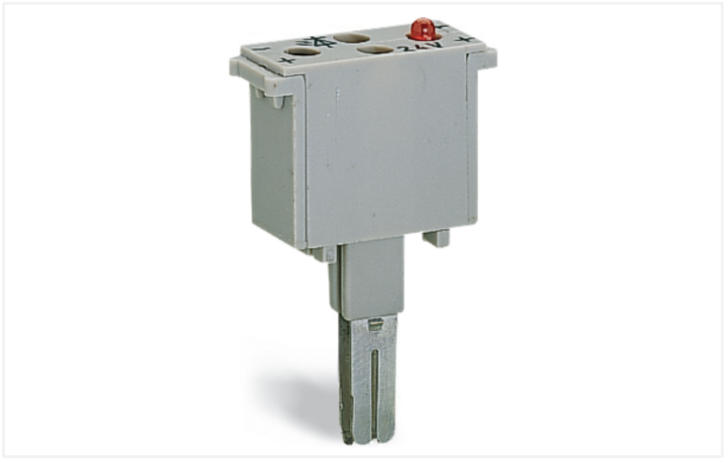

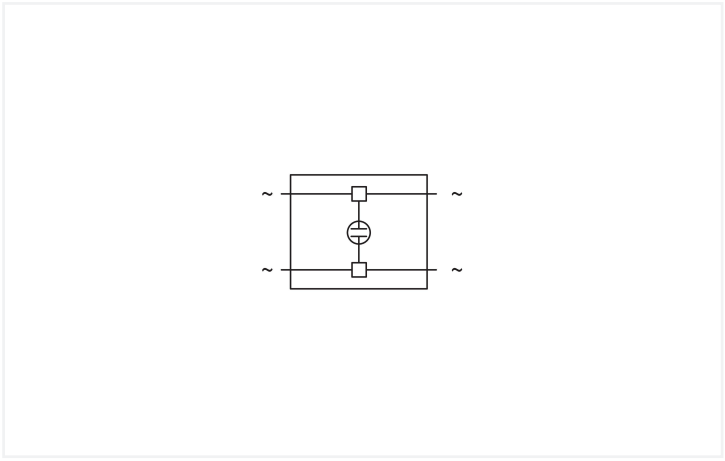

Color: gray

Similar to illustration

Neon indicator module, 280 Series, operating tool

This neon indicator module (item number 280-803/281-418) simplifies electrical installations.

Electrical data

Ratings per IEC/EN

Operation status indicator	120 V

General information

Voltage type 1	AC/DC
Number/type of diode/LED	with neon lamp
Alignment	none

Connection Data

Connection 1

Actuation type	Operating tool

Physical data

Width	10 mm / 0.394 inches

Material data

Note (material data)	Information on material specifications can be found here
Color	gray
Material group	I
Insulation material (main housing)	Polyamide (PA66)
Flammability class per UL94	V0
Fire load	0.074 MJ
Weight	4.2 g

Continued on next page

Environmental requirements

Processing temperature	-35 … +85 °C
Continuous operating temperature	-60 … +105 °C

Commercial data

Product Group	1 (Rail Mounted Terminal Blocks)
PU (SPU)	50 pcs
Packaging type	Box
Country of origin	DE
GTIN	4045454195991
Customs tariff number	85369010000

Product Classification

UNSPSC	39121402
eCl@ss 10.0	27-14-11-49
eCl@ss 9.0	27-14-11-49
ETIM 9.0	EC002018
ETIM 10.0	EC002018
ECCN	NO US CLASSIFICATION

Environmental Product Compliance

RoHS Compliance Status	Compliant,No Exemption

Downloads

Environmental Product Compliance

Compliance Search

Environmental Product Compliance 280-803/281-418

Documentation

Bid Text

280-803/281-418	19.02.2019	xml 2.68 KB	
280-803/281-418	27.04.2017	doc 23.00 KB	

Continued on next page

CAD/CAE-Data

CAD data

2D/3D Models
280-803/281-418

CAE data

WSCAD Universe
280-803/281-418

ZUKEN Portal
280-803/281-418

1 Compatible Products

1.1 Optional Accessories

1.1.1 Terminal blocks

1.1.1.1 Through terminal block



Item No.: 280-901
2-conductor through terminal block; 2.5 mm²; center marking; for DIN-rail 35 x 15 and 35 x 7.5; CAGE CLAMP®; 2,50 mm²; gray



Item No.: 280-101
2-conductor through terminal block; 2.5 mm²; lateral marker slots; for DIN-rail 35 x 15 and 35 x 7.5; CAGE CLAMP®; 2,50 mm²; gray



Item No.: 280-601
2-conductor through terminal block; 2.5 mm²; lateral marker slots; for DIN-rail 35 x 15 and 35 x 7.5; CAGE CLAMP®; 2,50 mm²; gray



Item No.: 280-681
3-conductor through terminal block; 2.5 mm²; center marking; for DIN-rail 35 x 15 and 35 x 7.5; CAGE CLAMP®; 2,50 mm²; gray



Item No.: 280-633
4-conductor through terminal block; 2.5 mm²; center marking; for DIN-rail 35 x 15 and 35 x 7.5; CAGE CLAMP®; 2,50 mm²; gray



Item No.: 280-833
4-conductor through terminal block; 2.5 mm²; center marking; for DIN-rail 35 x 15 and 35 x 7.5; CAGE CLAMP®; 2,50 mm²; gray



Item No.: 280-603
4-conductor through terminal block; 2.5 mm²; center marking; for DIN-rail 35 x 15 and 35 x 7.5; CAGE CLAMP®; 2,50 mm²; orange



Item No.: 280-621
4-conductor through terminal block; 2.5 mm²; lateral marker slots; for DIN-rail 35 x 15 and 35 x 7.5; CAGE CLAMP®; 2,50 mm²; gray

Installation Notes

Installation

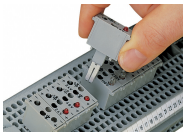

Similar to push-in type jumpers, these LED and neon indicator modules are simply pushed into the current bar's contact slots of two adjacent through terminal blocks,providing the following advantages:

- Compatibility with all 280 Series Through Terminal Blocks
- Easy retrofits for existing systemsAdditional advantages:

- Separation into functional and wiring levels
- Fast replacement of other functional units