Data Sheet | Item Number: 280-815/281-410

Component terminal block; 4-conductor; with diode 1N4007; anode, left side; for DIN-rail 35 x 15 and 35 x 7.5; 2.5 mm²; CAGE CLAMP®; gray

https://www.wago.com/280-815/281-410

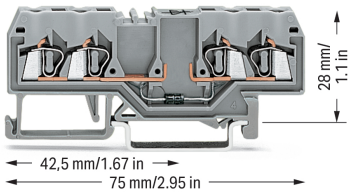

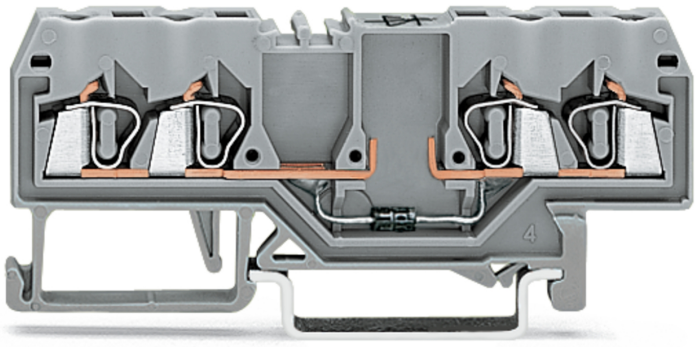

Color: gray

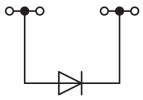

Component terminal block with diode, 280 Series, gray

Our component terminal block with diode (item number 280-815/281-410) ensures effortless electrical installations. Conductors should only be connected to this component terminal block with diode if their strip length is between 8 and 9 mm . This product features conductor terminals and utilizes CAGE CLAMP®. Our reliable and maintenance-free CAGE CLAMP® connection makes it easy to connect all types of conductors without having to prepare the conductor. For example, you don't need to crimp ferrules. This component terminal block with diode is suitable for conductor cross sections ranging from 0.08 mm² to 2.5 mm².

Electrical data

Ratings per	IEC/EN 60947-7-1		
Overvoltage category	III	III	II
Pollution degree	3	2	2
Nominal voltage	-	-	-
Rated impulse withstand voltage	-	-	-
Rated current	-	-	-

General information	
Nominal voltage	250 V
Reverse voltage	1000 V
Number/type of diode/LED	with 1N4007 diode
Wiring direction	Front-entry wiring
Alignment	Left-side anode

Connection Data

Clamping units	4
Total number of potentials	1
Number of levels	1

Connection 1

Connection technology	CAGE CLAMP®
Actuation type	Operating tool
Connectable conductor materials	Copper Aluminum
Connectable conductor materials (note)	**Terminating Aluminum Conductors** WAGO Spring-Clamp Terminal Blocks are suitable for solid aluminum conductors up to 4 mm²/12 AWG if WAGO Aluminum Contact Paste 249-130 is used for termination. Aluminum Contact Paste Advantages: ▪ Automatically destroys the oxide film during clamping. ▪ Prevents fresh oxidation at the clamping point. ▪ Prevents electrolytic corrosion between aluminum and copper conductors (in the same terminal block). ▪ Provides long-term protection against corrosion. Using terminal blocks with CAGE CLAMP® Spring Pressure Connection Technology, **aluminum conductors must first be cleaned with a blade** and then immediately inserted into the clamping units filled with aluminum contact paste. It is also possible to apply WAGO Aluminum Contact Paste **additionally** on the whole surface of the aluminum conductor before termination. Please note that the nominal currents must be adapted to the reduced conductivity of the aluminum conductors:: 2.5 mm² = 16 A 4 mm² = 22 A
Solid conductor	0.08 … 2.5 mm² / 28 … 14 AWG
Fine-stranded conductor	0.08 … 2.5 mm² / 28 … 14 AWG
Strip length	8 … 9 mm / 0.31 … 0.35 inches
Wiring direction	Front-entry wiring

Physical data

Width	5 mm / 0.197 inches
Height	75 mm / 2.953 inches
Depth from upper-edge of DIN-rail	28 mm / 1.102 inches

Mechanical data

Design	horizontal type
Mounting type	DIN-35 rail
Marking level	Center marking

Continued on next page

Material data

Note (material data)	Information on material specifications can be found here
Color	gray
Material group	I
Insulation material (main housing)	Polyamide (PA66)
Flammability class per UL94	V0
Fire load	0.16 MJ
Weight	9.3 g

Environmental requirements

Processing temperature	-35 … +85 °C
Continuous operating temperature	-60 … +105 °C

Commercial data

Product Group	1 (Rail Mounted Terminal Blocks)
PU (SPU)	100 pcs
Packaging type	Box
Country of origin	CN
GTIN	4050821275473
Customs tariff number	85369010000

Product Classification

UNSPSC	39121410
eCl@ss 10.0	27-14-11-27
eCl@ss 9.0	27-14-11-27
ETIM 9.0	EC000903
ETIM 10.0	EC000903
ECCN	NO US CLASSIFICATION

Environmental Product Compliance

CAS-No.	7439-92-1 79-94-7
REACH Candidate List Substance	2,2',6,6'-tetrabromo-4,4'-isopropylidenediphenol Lead
RoHS Compliance Status	Compliant,With Exemption
RoHS Exemption	7(a)
SCIP notification number (Austria)	5e655896-65ff-4ac9-bbca-9cda6dcc9488
SCIP notification number (Belgium)	0e35d7f7-797f-46c5-ac76-59521804af77
SCIP notification number (Bulgaria)	ee81166f-608c-42fa-ab29-b853ddf90568
SCIP notification number (Czech Republic)	44309132-87cb-484d-94f3-9b0a79d66e60
SCIP notification number (Denmark)	59272011-393c-44bc-9866-eaa32ebd5b28
SCIP notification number (Finland)	85518523-99b9-4c1f-850b-83d7a60ab022
SCIP notification number (France)	04a0ddf1-e2da-4525-8300-ba404d3b0994
SCIP notification number (Germany)	d8ca5835-b924-47f3-82bf-ab8f760d2299
SCIP notification number (Hungary)	c8917ccb-69f9-47a4-8b0d-7bc95d9cd52d
SCIP notification number (Italy)	8de64ab6-1879-41be-933e-3d220c772f09
SCIP notification number (Netherlands)	04588965-fe9c-47de-8dd4-e75ece8a2cfe
SCIP notification number (Poland)	12623302-99e9-4f32-8ffb-228de5b58bc2
SCIP notification number (Romania)	6c341a63-9636-4174-a02b-88f67fc81ce6
SCIP notification number (Sweden)	aa008298-69a4-4164-a6a9-90be910ce280

Continued on next page

Downloads

Environmental Product Compliance

Compliance Search

Environmental Product Compliance 280-815/281-410

Documentation

Bid Text

280-815/281-410	19.02.2019	xml 3.23 KB
280-815/281-410	10.04.2017	doc 24.50 KB

CAD/CAE-Data

CAD data

2D/3D Models 280-815/281-410

CAE data

EPLAN Data Portal 280-815/281-410

WSCAD Universe 280-815/281-410

ZUKEN Portal 280-815/281-410

1 Compatible Products

1.1 Required Accessories

1.1.1 End plate

1.1.1.1 End plate



Item No.: 280-314
End and intermediate plate; 2.5 mm thick; gray



Item No.: 280-315
End and intermediate plate; 2.5 mm thick; orange



Item No.: 280-334
Separator plate; 2 mm thick; oversized; gray



Item No.: 280-335
Separator plate; 2 mm thick; oversized; orange

1.2 Optional Accessories

1.2.1 DIN-rail

1.2.1.1 Mounting accessories



Item No.: 210-196
Aluminum carrier rail; 35 x 8.2 mm; 1.6 mm thick; 2 m long; unslotted; similar to EN 60715; silver-colored



Item No.: 210-198
Copper carrier rail; 35 x 15 mm; 2.3 mm thick; 2 m long; unslotted; according to EN 60715; copper-colored



Item No.: 210-508
Steel carrier rail; 35 x 15 mm; 1.5 mm thick; 2 m long; slotted; galvanized; similar to EN 60715; silver-colored



Item No.: 210-197
Steel carrier rail; 35 x 15 mm; 1.5 mm thick; 2 m long; slotted; similar to EN 60715; silver-colored

Continued on next page

1.2.1.1 Mounting accessories



Item No.: 210-506
Steel carrier rail; 35 x 15 mm; 1.5 mm thick; 2 m long; unslotted; galvanized; similar to EN 60715; silver-colored



Item No.: 210-114
Steel carrier rail; 35 x 15 mm; 1.5 mm thick; 2 m long; unslotted; similar to EN 60715; silver-colored



Item No.: 210-118
Steel carrier rail; 35 x 15 mm; 2.3 mm thick; 2 m long; unslotted; according to EN 60715; silver-colored



Item No.: 210-115
Steel carrier rail; 35 x 7.5 mm; 1 mm thick; 2 m long; slotted; according to EN 60715; "Hole width 18 mm; silver-colored



Item No.: 210-112
Steel carrier rail; 35 x 7.5 mm; 1 mm thick; 2 m long; slotted; according to EN 60715; "Hole width 25 mm; silver-colored



Item No.: 210-504
Steel carrier rail; 35 x 7.5 mm; 1 mm thick; 2 m long; slotted; galvanized; according to EN 60715; silver-colored



Item No.: 210-113
Steel carrier rail; 35 x 7.5 mm; 1 mm thick; 2 m long; unslotted; according to EN 60715; silver-colored



Item No.: 210-505
Steel carrier rail; 35 x 7.5 mm; 1 mm thick; 2 m long; unslotted; galvanized; according to EN 60715; silver-colored

1.2.2 Ferrule

1.2.2.1 Ferrule



Item No.: 216-301
Ferrule; Sleeve for 0.25 mm² / AWG 24; insulated; electro-tin plated; yellow

Item No.: 216-302
Ferrule; Sleeve for 0.34 mm² / 22 AWG; insulated; electro-tin plated; light turquoise

Item No.: 216-201
Ferrule; Sleeve for 0.5 mm² / 20 AWG; insulated; electro-tin plated; electrolytic copper; acc. to DIN 46228, Part 4/09.90; white



Item No.: 216-101
Ferrule; Sleeve for 0.5 mm² / AWG 22; uninsulated; electro-tin plated; silver-colored

Item No.: 216-202
Ferrule; Sleeve for 0.75 mm² / 18 AWG; insulated; electro-tin plated; gray



Item No.: 216-102
Ferrule; Sleeve for 0.75 mm² / 18 AWG; uninsulated; electro-tin plated; silver-colored

Item No.: 216-203
Ferrule; Sleeve for 1 mm² / AWG 18; insulated; electro-tin plated; red



Item No.: 216-103
Ferrule; Sleeve for 1 mm² / AWG 18; uninsulated; electro-tin plated



Item No.: 216-204
Ferrule; Sleeve for 1.5 mm² / AWG 16; insulated; electro-tin plated; black



Item No.: 216-104
Ferrule; Sleeve for 1.5 mm² / AWG 16; uninsulated; electro-tin plated; silver-colored

1.2.3 Installation

1.2.3.1 Cover



Item No.: 709-153
Cover; Type 1; suitable for cover carrier, type 1; 1 m long; transparent

1.2.3.2 Cover carrier



Item No.: 709-167
Cover carrier; Type 1; incl. fixing/retaining screws and knurled nut; suitable for 279 to 282 and 880 Series rail-mounted terminal blocks; suitable for 264 Series miniature rail-mounted terminal blocks; suitable for 270 Series sensor and actuator terminal blocks; gray

1.2.3.3 Mounting accessories



Item No.: 209-106
Mounting carrier; for isolated mounting on DIN 35 rails; gray



Item No.: 249-116
Screwless end stop; 6 mm wide; for DIN-rail 35 x 15 and 35 x 7.5; gray

1.2.4 Insulation stop

1.2.4.1 Insulation stop



Item No.: 280-470
Insulation stop; 0.08 - 0.2 mm² "s" (0.14 mm² "f-st"); 5 pieces/strip; white



Item No.: 280-471
Insulation stop; 0.25 - 0.5 mm²; 5 pieces/strip; light gray



Item No.: 280-472
Insulation stop; 0.75 - 1 mm²; 5 pieces/strip; black

1.2.5 Jumper

1.2.5.1 Jumper



Item No.: 280-490
Jumper; 10-way; insulated; gray



Item No.: 280-482
Jumper; 2-way; insulated; gray



Item No.: 280-492
Jumper; 2-way; insulated; gray



Item No.: 280-483
Jumper; 3-way; insulated; gray



Item No.: 280-484
Jumper; 4-way; insulated; gray



Item No.: 280-485
Jumper; 5-way; insulated; gray



Item No.: 210-103
Wire commoning chain; 0.5 mm²; insulated; black



Item No.: 709-110
Wire commoning chain; 2.5 mm²; insulated; black



Item No.: 709-111
Wire commoning chain; 2.5 mm²; insulated; black



Item No.: 709-112
Wire commoning chain; 2.5 mm²; insulated; black



Item No.: 210-123
Wire commoning chain; insulated; blue

1.2.6 Marking

1.2.6.1 Group marker carrier



Item No.: 249-105
Group marker carrier; gray

1.2.6.2 Marker

Item No.: 793-5501
WMB marking card; as card; for terminal block width 5 - 17.5 mm; stretchable 5 - 5.2 mm; plain; snap-on type; white

Item No.: 793-501
WMB marking card; as card; not stretchable; plain; snap-on type; white



Item No.: 2009-115
WMB-Inline; for Smart Printer; 1500 pieces on roll; stretchable 5 - 5.2 mm; plain; snap-on type; white

Continued on next page

1.2.7 Protective warning marker

1.2.7.1 Cover



Item No.: 280-415
Protective warning marker; for 5 terminal blocks; with high-voltage symbol, black; yellow

1.2.8 Test and measurement

1.2.8.1 Testing accessories



Item No.: 249-142
L-type end module; modular; with rigid contact pin; End module; 1,50 mm²; gray



Item No.: 249-143
L-type spacer module; modular; e.g., bridging commoned terminal blocks; gray



Item No.: 249-141
L-type test plug module; modular; with spring-loaded contact pin; Center module; 1,50 mm²; gray

1.2.9 Tool

1.2.9.1 Operating tool



Item No.: 210-658
Operating tool; Blade: 3.5 x 0.5 mm; with a partially insulated shaft; angled; short; multicoloured



Item No.: 210-720
Operating tool; Blade: 3.5 x 0.5 mm; with a partially insulated shaft; multicoloured



Item No.: 210-657
Operating tool; Blade: 3.5 x 0.5 mm; with a partially insulated shaft; short; multicoloured

Installation Notes

Commoning

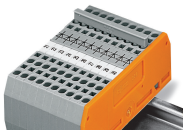

Commoning using comb-style jumper bars: Push comb-style jumper bars down until fully inserted.

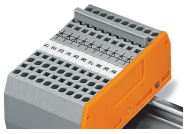

These diode terminal blocks have been specially developed for custom diode circuits, such as lamp test and collective fault signal circuits.

Continued on next page



Polarized diode gates with a common cathode can be created using the following terminal blocks:
280-815/281-410 or 280-815/281-411