Data Sheet | Item Number: 280-889

Triple-deck terminal block; with additional jumper position on lower level; for DIN-rail 35 x 15 and 35 x 7.5; 2.5 mm²; CAGE CLAMP®; 2,50 mm²; gray/gray/gray

https://www.wago.com/280-889

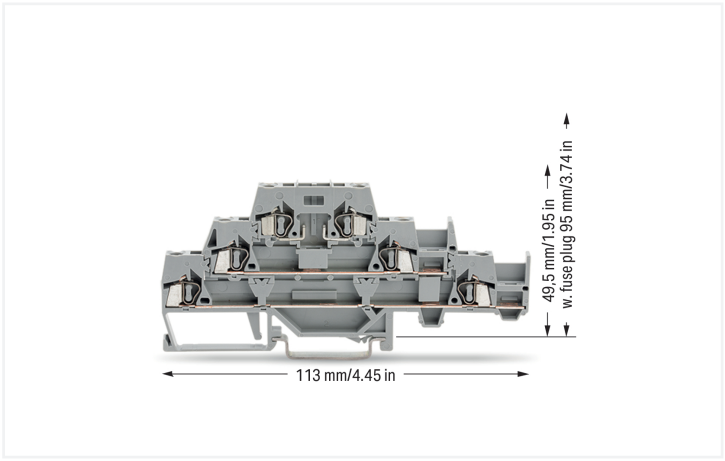

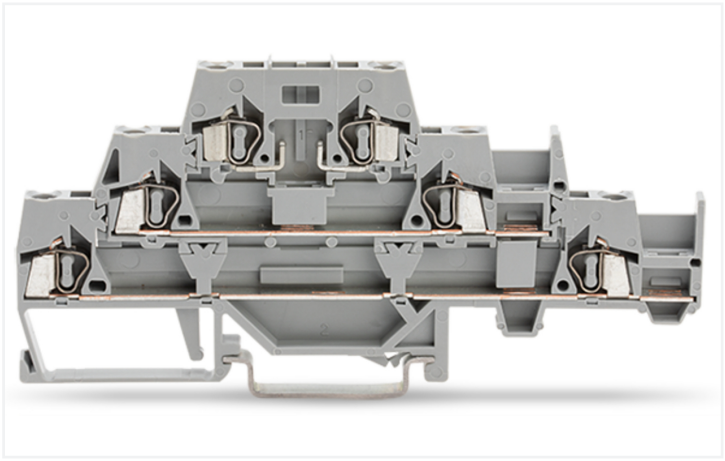

Color: gray/gray/gray

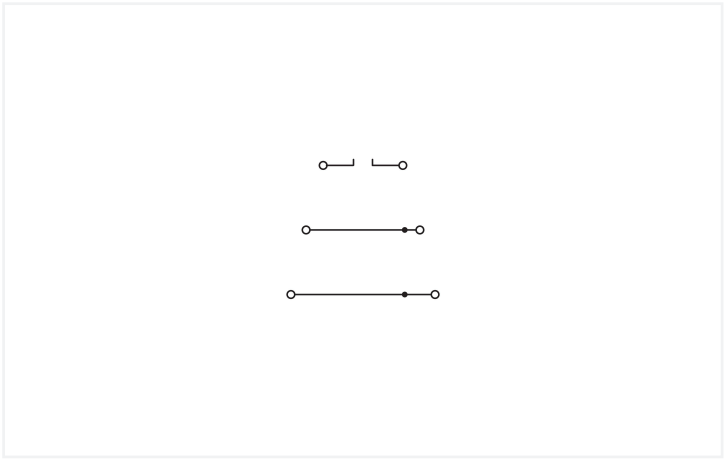

Similar to illustration

Triple-deck terminal block, 280 Series, operating tool

Our triple-deck terminal block (item number 280-889) ensures effortless electrical installations. Strip lengths must be between 8 and 9 mm when connecting conductors to this triple-deck terminal block. The triple-deck terminal block also functions as carrier terminal block. Featuring conductor terminals along with CAGE CLAMP®, this product outperforms the competition. Our CAGE CLAMP® connection offers a dependable and maintenance-free way to connect all types of conductors. You do not need to prepare the conductor in any way, such as crimping ferrules. Depending on the conductor type, this triple-deck terminal block is suitable for conductor cross sections ranging from 0.08 mm² to 2.5 mm².

Electrical data

Ratings per	IEC/EN 60947-7-1		
Overvoltage category	III	III	II
Pollution degree	3	2	2
Nominal voltage	400 V	-	-
Rated impulse withstand voltage	6 kV	-	-
Rated current	20 A	-	-

Power Loss	
Power loss, per pole (potential)	0.532 W
Rated current I_N for power loss specification	20 A
Resistance value for specified, current-dependent power loss	0.00133 Ω

General information

Wiring direction	Front-entry wiring

Connection Data

Clamping units	6
Total number of potentials	3
Number of levels	3

Connection 1

Connection technology	CAGE CLAMP®
Actuation type	Operating tool
Connectable conductor materials	Copper Aluminum
Connectable conductor materials (note)	**Terminating Aluminum Conductors** WAGO Spring-Clamp Terminal Blocks are suitable for solid aluminum conductors up to 4 mm²/12 AWG if WAGO Aluminum Contact Paste 249-130 is used for termination. Aluminum Contact Paste Advantages: ▪ Automatically destroys the oxide film during clamping. ▪ Prevents fresh oxidation at the clamping point. ▪ Prevents electrolytic corrosion between aluminum and copper conductors (in the same terminal block). ▪ Provides long-term protection against corrosion. Using terminal blocks with CAGE CLAMP® Spring Pressure Connection Technology, **aluminum conductors must first be cleaned with a blade** and then immediately inserted into the clamping units filled with aluminum contact paste. It is also possible to apply WAGO Aluminum Contact Paste **additionally** on the whole surface of the aluminum conductor before termination. Please note that the nominal currents must be adapted to the reduced conductivity of the aluminum conductors:: 2.5 mm² = 16 A 4 mm² = 22 A
Solid conductor	0.08 … 2.5 mm² / 28 … 12 AWG
Fine-stranded conductor	0.08 … 2.5 mm² / 28 … 12 AWG
Note (conductor cross-section)	12 AWG: THHN, THWN
Strip length	8 … 9 mm / 0.31 … 0.35 inches
Wiring direction	Front-entry wiring

Physical data

Width	5 mm / 0.197 inches
Height	113 mm / 4.449 inches
Depth from upper-edge of DIN-rail	49.5 mm / 1.949 inches

Continued on next page

Mechanical data

Design	horizontal type
Mounting type	DIN-35 rail
Marking level	without marking level

Material data

Note (material data)	Information on material specifications can be found here
Color	gray/gray/gray
Material group	I
Insulation material (main housing)	Polyamide (PA66)
Flammability class per UL94	V0
Fire load	0.28 MJ
Weight	17.7 g

Environmental requirements

Processing temperature	-35 … +85 °C
Continuous operating temperature	-60 … +105 °C

Commercial data

Product Group	1 (Rail Mounted Terminal Blocks)
PU (SPU)	50 pcs
Packaging type	Box
Country of origin	DE
GTIN	4044918539081
Customs tariff number	85369010000

Product Classification

UNSPSC	39121410
eCl@ss 10.0	27-14-11-20
eCl@ss 9.0	27-14-11-20
ETIM 9.0	EC000897
ETIM 10.0	EC000897
ECCN	NO US CLASSIFICATION

Environmental Product Compliance

RoHS Compliance Status	Compliant,No Exemption

Approvals / Certificates

General approvals

Approval	Standard	Certificate Name
CSA DEKRA Certification B.V.	C22.2	1536071
UL Underwriters Laboratories Inc.	UL 1059	UL-US-L45172-6187116-11019891-1

Continued on next page

Downloads

Environmental Product Compliance

Compliance Search

Environmental Product Compliance 280-889

Documentation

Bid Text

280-889	19.02.2019	xml 3.61 KB
280-889	02.03.2017	doc 25.00 KB

CAD/CAE-Data

CAD data

2D/3D Models 280-889

CAE data

EPLAN Data Portal 280-889

WSCAD Universe 280-889

ZUKEN Portal 280-889

1 Compatible Products

1.1 Required Accessories

1.1.1 End plate

1.1.1.1 End plate



Item No.: 280-305
End and intermediate plate; 2.5 mm thick; gray



Item No.: 280-306
End and intermediate plate; 2.5 mm thick; orange



Item No.: 280-339
Intermediate plate; 1.1 mm thick; orange

1.2 Optional Accessories

1.2.1 DIN-rail

1.2.1.1 Mounting accessories



Item No.: 210-196
Aluminum carrier rail; 35 x 8.2 mm; 1.6 mm thick; 2 m long; unslotted; similar to EN 60715; silver-colored



Item No.: 210-198
Copper carrier rail; 35 x 15 mm; 2.3 mm thick; 2 m long; unslotted; according to EN 60715; copper-colored



Item No.: 210-508
Steel carrier rail; 35 x 15 mm; 1.5 mm thick; 2 m long; slotted; galvanized; similar to EN 60715; silver-colored



Item No.: 210-197
Steel carrier rail; 35 x 15 mm; 1.5 mm thick; 2 m long; slotted; similar to EN 60715; silver-colored



Item No.: 210-506
Steel carrier rail; 35 x 15 mm; 1.5 mm thick; 2 m long; unslotted; galvanized; similar to EN 60715; silver-colored



Item No.: 210-114
Steel carrier rail; 35 x 15 mm; 1.5 mm thick; 2 m long; unslotted; similar to EN 60715; silver-colored



Item No.: 210-118
Steel carrier rail; 35 x 15 mm; 2.3 mm thick; 2 m long; unslotted; according to EN 60715; silver-colored



Item No.: 210-115
Steel carrier rail; 35 x 7.5 mm; 1 mm thick; 2 m long; slotted; according to EN 60715; "Hole width 18 mm; silver-colored

Continued on next page

1.2.1.1 Mounting accessories



Item No.: 210-112
Steel carrier rail; 35 x 7.5 mm; 1 mm thick; 2 m long; slotted; according to EN 60715; "Hole width 25 mm; silver-colored



Item No.: 210-504
Steel carrier rail; 35 x 7.5 mm; 1 mm thick; 2 m long; slotted; galvanized; according to EN 60715; silver-colored



Item No.: 210-113
Steel carrier rail; 35 x 7.5 mm; 1 mm thick; 2 m long; unslotted; according to EN 60715; silver-colored



Item No.: 210-505
Steel carrier rail; 35 x 7.5 mm; 1 mm thick; 2 m long; unslotted; galvanized; according to EN 60715; silver-colored

1.2.2 Ferrule

1.2.2.1 Ferrule

Item No.: 216-301
Ferrule; Sleeve for 0.25 mm² / AWG 24; insulated; electro-tin plated; yellow

Item No.: 216-302
Ferrule; Sleeve for 0.34 mm² / 22 AWG; insulated; electro-tin plated; light turquoise

Item No.: 216-201
Ferrule; Sleeve for 0.5 mm² / 20 AWG; insulated; electro-tin plated; electrolytic copper; acc. to DIN 46228, Part 4/09.90; white



Item No.: 216-101
Ferrule; Sleeve for 0.5 mm² / AWG 22; uninsulated; electro-tin plated; silver-colored

Item No.: 216-202
Ferrule; Sleeve for 0.75 mm² / 18 AWG; insulated; electro-tin plated; gray



Item No.: 216-102
Ferrule; Sleeve for 0.75 mm² / 18 AWG; uninsulated; electro-tin plated; silver-colored

Item No.: 216-203
Ferrule; Sleeve for 1 mm² / AWG 18; insulated; electro-tin plated; red



Item No.: 216-103
Ferrule; Sleeve for 1 mm² / AWG 18; uninsulated; electro-tin plated

Item No.: 216-204
Ferrule; Sleeve for 1.5 mm² / AWG 16; insulated; electro-tin plated; black



Item No.: 216-104
Ferrule; Sleeve for 1.5 mm² / AWG 16; uninsulated; electro-tin plated; silver-colored

1.2.3 Installation

1.2.3.1 Cover



Item No.: 709-154
Cover; Type 2; suitable for cover carrier, type 2; 1 m long; transparent

1.2.3.2 Cover carrier



Item No.: 709-168
Cover carrier; Type 2; incl. fixing/retaining screws and knurled nut; suitable for 283 to 285 Series rail-mounted terminal blocks; suitable for 279 to 281 Series double- and triple-deck terminal blocks; suitable for 780 to 785, 775, 776 and 777 Series TOPJOB® rail-mounted terminal blocks; suitable for 280 Series sensor and actuator terminal blocks; suitable for 282 Series disconnect/test terminal blocks for transformer circuits; gray

Continued on next page

1.2.3.3 Mounting accessories



Item No.: 209-106
Mounting carrier; for isolated mounting on DIN 35 rails; gray



Item No.: 249-116
Screwless end stop; 6 mm wide; for DIN-rail 35 x 15 and 35 x 7.5; gray

1.2.4 Insulation stop

1.2.4.1 Insulation stop



Item No.: 280-470
Insulation stop; 0.08 - 0.2 mm² "s" (0.14 mm² "f-st"); 5 pieces/strip; white



Item No.: 280-471
Insulation stop; 0.25 - 0.5 mm²; 5 pieces/strip; light gray



Item No.: 280-472
Insulation stop; 0.75 - 1 mm²; 5 pieces/strip; black

1.2.5 Jumper

1.2.5.1 Jumper



Item No.: 280-490
Jumper; 10-way; insulated; gray



Item No.: 280-482
Jumper; 2-way; insulated; gray



Item No.: 280-492
Jumper; 2-way; insulated; gray



Item No.: 280-483
Jumper; 3-way; insulated; gray



Item No.: 280-484
Jumper; 4-way; insulated; gray



Item No.: 280-485
Jumper; 5-way; insulated; gray



Item No.: 280-402
Jumper; insulated; gray



Item No.: 280-409
Jumper; insulated; gray



Item No.: 780-452
Staggered jumper; from 1 to 2; insulated; gray



Item No.: 780-453
Staggered jumper; from 1 to 3; insulated; gray



Item No.: 780-454
Staggered jumper; from 1 to 4; insulated; gray



Item No.: 780-455
Staggered jumper; from 1 to 5; insulated; gray



Item No.: 780-456
Staggered jumper; from 1 to 6; insulated; gray



Item No.: 780-457
Staggered jumper; from 1 to 7; insulated; gray



Item No.: 780-458
Staggered jumper; from 1 to 8; insulated; gray

Item No.: 281-421
Vertical jumper; insulated; gray



Item No.: 210-103
Wire commoning chain; 0.5 mm²; insulated; black



Item No.: 709-110
Wire commoning chain; 2.5 mm²; insulated; black



Item No.: 709-111
Wire commoning chain; 2.5 mm²; insulated; black



Item No.: 709-112
Wire commoning chain; 2.5 mm²; insulated; black



Item No.: 210-123
Wire commoning chain; insulated; blue

Continued on next page

1.2.6 Marking

1.2.6.1 Marker

Item No.: 793-5501
WMB marking card; as card; for terminal block width 5 - 17.5 mm; stretchable 5 - 5.2 mm; plain; snap-on type; white

Item No.: 793-501
WMB marking card; as card; not stretchable; plain; snap-on type; white



Item No.: 2009-115
WMB-Inline; for Smart Printer; 1500 pieces on roll; stretchable 5 - 5.2 mm; plain; snap-on type; white

1.2.7 Plug

1.2.7.1 Fuse plug



Item No.: 281-512/281-418
Fuse plug; with pull-tab; for miniature metric fuses 5 x 20 mm and 5 x 25 mm; with blown fuse indication by neon lamp; 120 V; 6 mm wide; gray



Item No.: 281-512/281-417
Fuse plug; with pull-tab; for miniature metric fuses 5 x 20 mm and 5 x 25 mm; with blown fuse indication by neon lamp; 230 V; 6 mm wide; gray



Item No.: 281-512/281-501
Fuse plug; with pull-tab; for miniature metric fuses 5 x 20 mm and 5 x 25 mm; with LED indicator; 24 V AC/DC; 6 mm wide; gray



Item No.: 281-512
Fuse plug; with pull-tab; for miniature metric fuses 5 x 20 mm and 5 x 25 mm; with port for LED; 6 mm wide; gray



Item No.: 281-511
Fuse plug; with pull-tab; for miniature metric fuses 5 x 20 mm and 5 x 25 mm; without blown fuse indication; 6 mm wide; gray



Item No.: 280-854
Fuse plug; with soldered miniature fuse; 1 A FF; 5 mm wide; gray



Item No.: 280-856
Fuse plug; with soldered miniature fuse; 2 A FF; 5 mm wide; gray



Item No.: 280-850
Fuse plug; with soldered miniature fuse; 250 mA FF; 5 mm wide; gray



Item No.: 280-852
Fuse plug; with soldered miniature fuse; 500 mA FF; 5 mm wide; gray



Item No.: 280-854/281-415
Fuse plug; with soldered miniature fuse; with indicator lamp; LED (red); AC 15 - 30 V; 1 A FF; 5 mm wide; gray



Item No.: 280-856/281-415
Fuse plug; with soldered miniature fuse; with indicator lamp; LED (red); AC 15 - 30 V; 2 A FF; 5 mm wide; gray



Item No.: 280-850/281-415
Fuse plug; with soldered miniature fuse; with indicator lamp; LED (red); AC 15 - 30 V; 250 mA FF; 5 mm wide; gray



Item No.: 280-852/281-415
Fuse plug; with soldered miniature fuse; with indicator lamp; LED (red); AC 15 - 30 V; 500 mA FF; 5 mm wide; gray



Item No.: 280-854/281-413
Fuse plug; with soldered miniature fuse; with indicator lamp; LED (red); DC 15 - 30 V; 1 A FF; 5 mm wide; gray



Item No.: 280-856/281-413
Fuse plug; with soldered miniature fuse; with indicator lamp; LED (red); DC 15 - 30 V; 2 A FF; 5 mm wide; gray



Item No.: 280-850/281-413
Fuse plug; with soldered miniature fuse; with indicator lamp; LED (red); DC 15 - 30 V; 250 mA FF; 5 mm wide; gray



Item No.: 280-852/281-413
Fuse plug; with soldered miniature fuse; with indicator lamp; LED (red); DC 15 - 30 V; 500 mA FF; 5 mm wide; gray



Item No.: 280-854/281-414
Fuse plug; with soldered miniature fuse; with indicator lamp; LED (red); DC 30 - 65 V; 1 A FF; 5 mm wide; gray



Item No.: 280-856/281-414
Fuse plug; with soldered miniature fuse; with indicator lamp; LED (red); DC 30 - 65 V; 2 A FF; 5 mm wide; gray



Item No.: 280-850/281-414
Fuse plug; with soldered miniature fuse; with indicator lamp; LED (red); DC 30 - 65 V; 250 mA FF; 5 mm wide; gray



Item No.: 280-852/281-414
Fuse plug; with soldered miniature fuse; with indicator lamp; LED (red); DC 30 - 65 V; 500 mA FF; 5 mm wide; gray

Continued on next page

1.2.8 Protective warning marker

1.2.8.1 Cover



Item No.: 280-415
Protective warning marker; for 5 terminal blocks; with high-voltage symbol, black; yellow

1.2.9 Push-in type wire jumper

1.2.9.1 Jumper



Item No.: 249-126
Push-in type wire jumper; 0.75 mm²; insulated; 110 mm long; black



Item No.: 249-123
Push-in type wire jumper; 0.75 mm²; insulated; 180 mm long; black



Item No.: 249-127
Push-in type wire jumper; 0.75 mm²; insulated; 250 mm long; black



Item No.: 249-125
Push-in type wire jumper; insulated; 60 mm long; black

1.2.10 Test and measurement

1.2.10.1 Testing accessories



Item No.: 249-142
L-type end module; modular; with rigid contact pin; End module; 1,50 mm²; gray



Item No.: 249-141
L-type test plug module; modular; with spring-loaded contact pin; Center module; 1,50 mm²; gray

1.2.11 Tool

1.2.11.1 Operating tool



Item No.: 210-658
Operating tool; Blade: 3.5 x 0.5 mm; with a partially insulated shaft; angled; short; multicoloured



Item No.: 210-720
Operating tool; Blade: 3.5 x 0.5 mm; with a partially insulated shaft; multicoloured



Item No.: 210-657
Operating tool; Blade: 3.5 x 0.5 mm; with a partially insulated shaft; short; multicoloured

Installation Notes

Installation

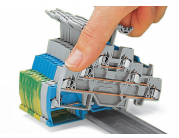

Snapping a terminal block onto the DIN-rail.

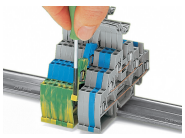

Removing a terminal block from the assembly.

Conductor termination

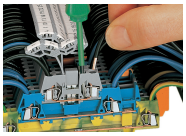

CAGE CLAMP® connection
Inserting a conductor.
With ferruled conductors, it is necessary to use a terminal block one size smaller than the conductor's nominal cross-section.

Commoning

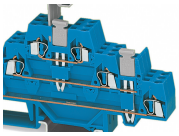

A vertical jumper commons the upper and lower decks, creating a 6-conductor feedthrough terminal block in one housing. Two adjacent triple-deck terminal blocks may be commoned together on the same deck using a push-in adjacent jumper.

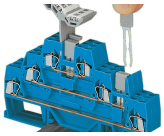

Combining vertical and adjacent jumpers.

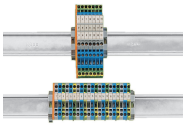

Use 67% less rail space with triple-deck terminal blocks.

Marking



Labeling via WMB Multi Marking System.