Data Sheet | Item Number: 280-942/281-487

Component terminal block; double-deck; with 2 diodes 1N4007; Bottom anode; for DIN-rail 35 x 15 and 35 x 7.5; 2.5 mm²; CAGE CLAMP®; gray

https://www.wago.com/280-942/281-487

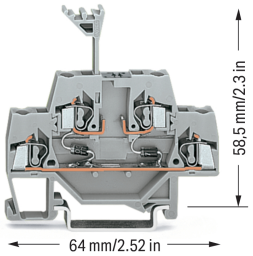

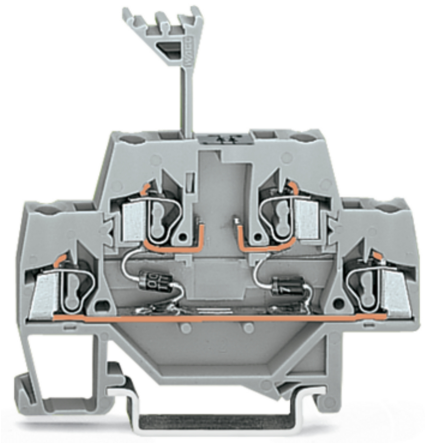

Color: gray

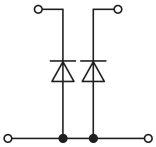

Double-deck terminal block, 280 Series, CAGE CLAMP®

This double-deck terminal block (item number 280-942/281-487) simplifies electrical installations. Conductors can only be connected to this double-deck terminal block if their strip length is between 8 and 9 mm . The double-deck terminal block also serves as a component terminal block with diode. This product incorporates conductor terminals and utilizes CAGE CLAMP®. Our CAGE CLAMP® connection provides a safe and maintenance-free way to connect all types of conductors. You do not need to prepare the conductor in any way, such as crimping ferrules. This double-deck terminal block is suitable for conductor cross sections ranging from 0.08 mm² to 2.5 mm².

Electrical data

Ratings per	IEC/EN 60947-7-1		
Overvoltage category	III	III	II
Pollution degree	3	2	2
Nominal voltage	-	-	-
Rated impulse withstand voltage	-	-	-
Rated current	-	-	-

General information	
Nominal voltage	250 V
Reverse voltage	1000 V
Number/type of diode/LED	with 2 1N4007 diodes
Wiring direction	Front-entry wiring
Alignment	Bottom anode

Connection Data

Clamping units	4
Total number of potentials	2
Number of levels	2

Connection 1

Connection technology	CAGE CLAMP®
Actuation type	Operating tool
Connectable conductor materials	Copper Aluminum
Connectable conductor materials (note)	**Terminating Aluminum Conductors** WAGO Spring-Clamp Terminal Blocks are suitable for solid aluminum conductors up to 4 mm²/12 AWG if WAGO Aluminum Contact Paste 249-130 is used for termination. Aluminum Contact Paste Advantages: ▪ Automatically destroys the oxide film during clamping. ▪ Prevents fresh oxidation at the clamping point. ▪ Prevents electrolytic corrosion between aluminum and copper conductors (in the same terminal block). ▪ Provides long-term protection against corrosion. Using terminal blocks with CAGE CLAMP® Spring Pressure Connection Technology, **aluminum conductors must first be cleaned with a blade** and then immediately inserted into the clamping units filled with aluminum contact paste. It is also possible to apply WAGO Aluminum Contact Paste **additionally** on the whole surface of the aluminum conductor before termination. Please note that the nominal currents must be adapted to the reduced conductivity of the aluminum conductors:: 2.5 mm² = 16 A 4 mm² = 22 A
Solid conductor	0.08 … 2.5 mm² / 28 … 14 AWG
Fine-stranded conductor	0.08 … 2.5 mm² / 28 … 14 AWG
Strip length	8 … 9 mm / 0.31 … 0.35 inches
Wiring direction	Front-entry wiring

Physical data

Width	5 mm / 0.197 inches
Height	64 mm / 2.52 inches
Depth from upper-edge of DIN-rail	58.5 mm / 2.303 inches

Mechanical data

Design	horizontal type
Mounting type	DIN-35 rail
Marking level	Center marking

Continued on next page

Material data

Note (material data)	Information on material specifications can be found here
Color	gray
Material group	I
Insulation material (main housing)	Polyamide (PA66)
Flammability class per UL94	V0
Fire load	0.182 MJ
Weight	10.3 g

Environmental requirements

Processing temperature	-35 … +85 °C
Continuous operating temperature	-60 … +105 °C

Commercial data

Product Group	1 (Rail Mounted Terminal Blocks)
PU (SPU)	50 pcs
Packaging type	Box
Country of origin	DE
GTIN	4045454196776
Customs tariff number	85369010000

Product Classification

UNSPSC	39121410
eCl@ss 10.0	27-14-11-27
eCl@ss 9.0	27-14-11-27
ETIM 9.0	EC000903
ETIM 10.0	EC000903
ECCN	NO US CLASSIFICATION

Environmental Product Compliance

CAS-No.	7439-92-1 79-94-7
REACH Candidate List Substance	2,2',6,6'-tetrabromo-4,4'-isopropylidenediphenol Lead
RoHS Compliance Status	Compliant,With Exemption
RoHS Exemption	7(a)
SCIP notification number (Austria)	2e06afc6-1a5b-41a4-94db-922a13842577
SCIP notification number (Belgium)	034255c6-2d42-46b6-b614-0bbff779bf04
SCIP notification number (Bulgaria)	69e59ed1-ddc0-4c50-88a8-c6df07c58581
SCIP notification number (Czech Republic)	814b4ad8-d7db-43ca-a47a-744adc315b5e
SCIP notification number (Denmark)	44def4d3-e563-48cd-9f3e-383a371b09c7
SCIP notification number (Finland)	3acb43bb-7e2d-438b-a3e1-6ca7f5857877
SCIP notification number (France)	d94820fb-c591-4073-8e74-035fd02f7533
SCIP notification number (Germany)	127c9f77-eb32-4045-be4d-b9dc98560be2
SCIP notification number (Hungary)	434e8b2c-6c62-4fec-9850-8d1736af406e
SCIP notification number (Italy)	87c1b80a-5c86-4546-b7c2-2cab159db94f
SCIP notification number (Netherlands)	6e02dca6-e256-4b9f-8d2e-18745a8f1518
SCIP notification number (Poland)	591a2d89-aa60-4900-893a-78b6c28795fd
SCIP notification number (Romania)	1ae15365-d091-4d36-bf3c-1214a09289f2
SCIP notification number (Sweden)	2e2f86d4-46e2-435a-b23b-2e9c596728ef

Continued on next page

Approvals / Certificates

General approvals

Approval	Standard	Certificate Name
KEMA/KEUR DEKRA Certification B.V.	EN 60947	71-154769

Declarations of conformity and manufacturer's declarations

Approval	Standard	Certificate Name
EU-Declaration of Conformity WAGO GmbH & Co. KG	-	-
UK-Declaration of Conformity WAGO GmbH & Co. KG	-	-

Approvals for marine applications

Approval	Standard	Certificate Name
ABS American Bureau of Shipping	EN 60947	24-0152298-PDA

Downloads

Environmental Product Compliance

Compliance Search

Environmental Product Compliance
280-942/281-487

Documentation

Bid Text

280-942/281-487	19.02.2019	xml 3.23 KB
280-942/281-487	27.04.2017	doc 24.50 KB

CAD/CAE-Data

CAD data

2D/3D Models
280-942/281-487

CAE data

EPLAN Data Portal
280-942/281-487

WSCAD Universe
280-942/281-487

ZUKEN Portal
280-942/281-487

Continued on next page

1 Compatible Products

1.1 Required Accessories

1.1.1 End plate

1.1.1.1 End plate



Item No.: 280-340
End and intermediate plate; 2.5 mm thick; gray



Item No.: 280-341
End and intermediate plate; 2.5 mm thick; orange

1.2 Optional Accessories

1.2.1 DIN-rail

1.2.1.1 Mounting accessories



Item No.: 210-196
Aluminum carrier rail; 35 x 8.2 mm; 1.6 mm thick; 2 m long; unslotted; similar to EN 60715; silver-colored



Item No.: 210-198
Copper carrier rail; 35 x 15 mm; 2.3 mm thick; 2 m long; unslotted; according to EN 60715; copper-colored



Item No.: 210-508
Steel carrier rail; 35 x 15 mm; 1.5 mm thick; 2 m long; slotted; galvanized; similar to EN 60715; silver-colored



Item No.: 210-197
Steel carrier rail; 35 x 15 mm; 1.5 mm thick; 2 m long; slotted; similar to EN 60715; silver-colored



Item No.: 210-506
Steel carrier rail; 35 x 15 mm; 1.5 mm thick; 2 m long; unslotted; galvanized; similar to EN 60715; silver-colored



Item No.: 210-114
Steel carrier rail; 35 x 15 mm; 1.5 mm thick; 2 m long; unslotted; similar to EN 60715; silver-colored



Item No.: 210-118
Steel carrier rail; 35 x 15 mm; 2.3 mm thick; 2 m long; unslotted; according to EN 60715; silver-colored



Item No.: 210-115
Steel carrier rail; 35 x 7.5 mm; 1 mm thick; 2 m long; slotted; according to EN 60715; "Hole width 18 mm; silver-colored



Item No.: 210-112
Steel carrier rail; 35 x 7.5 mm; 1 mm thick; 2 m long; slotted; according to EN 60715; "Hole width 25 mm; silver-colored



Item No.: 210-504
Steel carrier rail; 35 x 7.5 mm; 1 mm thick; 2 m long; slotted; galvanized; according to EN 60715; silver-colored



Item No.: 210-113
Steel carrier rail; 35 x 7.5 mm; 1 mm thick; 2 m long; unslotted; according to EN 60715; silver-colored



Item No.: 210-505
Steel carrier rail; 35 x 7.5 mm; 1 mm thick; 2 m long; unslotted; galvanized; according to EN 60715; silver-colored

1.2.2 Female connector

1.2.2.1 Female connector/socket



Item No.: 722-240/005-000/039-000
Female connector for rail-mount terminal blocks; 0.6 x 1 mm pins; angled; 100% protected against mismating; Locking lever; Pin spacing 5 mm; 10-pole; light gray



Item No.: 722-242/005-000/039-000
Female connector for rail-mount terminal blocks; 0.6 x 1 mm pins; angled; 100% protected against mismating; Locking lever; Pin spacing 5 mm; 12-pole; light gray



Item No.: 722-244/005-000/039-000
Female connector for rail-mount terminal blocks; 0.6 x 1 mm pins; angled; 100% protected against mismating; Locking lever; Pin spacing 5 mm; 14-pole; light gray



Item No.: 722-246/005-000/039-000
Female connector for rail-mount terminal blocks; 0.6 x 1 mm pins; angled; 100% protected against mismating; Locking lever; Pin spacing 5 mm; 16-pole; light gray



Item No.: 722-232/005-000/039-000
Female connector for rail-mount terminal blocks; 0.6 x 1 mm pins; angled; 100% protected against mismating; Locking lever; Pin spacing 5 mm; 2-pole; light gray



Item No.: 722-233/005-000/039-000
Female connector for rail-mount terminal blocks; 0.6 x 1 mm pins; angled; 100% protected against mismating; Locking lever; Pin spacing 5 mm; 3-pole; light gray



Item No.: 722-234/005-000/039-000
Female connector for rail-mount terminal blocks; 0.6 x 1 mm pins; angled; 100% protected against mismating; Locking lever; Pin spacing 5 mm; 4-pole; light gray



Item No.: 722-235/005-000/039-000
Female connector for rail-mount terminal blocks; 0.6 x 1 mm pins; angled; 100% protected against mismating; Locking lever; Pin spacing 5 mm; 5-pole; light gray



Item No.: 722-236/005-000/039-000
Female connector for rail-mount terminal blocks; 0.6 x 1 mm pins; angled; 100% protected against mismating; Locking lever; Pin spacing 5 mm; 6-pole; light gray



Item No.: 722-237/005-000/039-000
Female connector for rail-mount terminal blocks; 0.6 x 1 mm pins; angled; 100% protected against mismating; Locking lever; Pin spacing 5 mm; 7-pole; light gray



Item No.: 722-239/005-000/039-000
Female connector for rail-mount terminal blocks; 0.6 x 1 mm pins; angled; 100% protected against mismating; Locking lever; Pin spacing 5 mm; 9-pole; light gray



Item No.: 722-240/005-000
Female connector for rail-mount terminal blocks; 0.6 x 1 mm pins; angled; 100% protected against mismating; Pin spacing 5 mm; 10-pole; light gray

Continued on next page

1.2.2.1 Female connector/socket



Item No.: 722-241/005-000
Female connector for rail-mount terminal blocks; 0.6 x 1 mm pins; angled; 100% protected against mismating; Pin spacing 5 mm; 11-pole; light gray



Item No.: 722-242/005-000
Female connector for rail-mount terminal blocks; 0.6 x 1 mm pins; angled; 100% protected against mismating; Pin spacing 5 mm; 12-pole; light gray



Item No.: 722-243/005-000
Female connector for rail-mount terminal blocks; 0.6 x 1 mm pins; angled; 100% protected against mismating; Pin spacing 5 mm; 13-pole; light gray



Item No.: 722-244/005-000
Female connector for rail-mount terminal blocks; 0.6 x 1 mm pins; angled; 100% protected against mismating; Pin spacing 5 mm; 14-pole; light gray



Item No.: 722-246/005-000
Female connector for rail-mount terminal blocks; 0.6 x 1 mm pins; angled; 100% protected against mismating; Pin spacing 5 mm; 16-pole; light gray



Item No.: 722-250/005-000
Female connector for rail-mount terminal blocks; 0.6 x 1 mm pins; angled; 100% protected against mismating; Pin spacing 5 mm; 20-pole; light gray



Item No.: 722-232/005-000
Female connector for rail-mount terminal blocks; 0.6 x 1 mm pins; angled; 100% protected against mismating; Pin spacing 5 mm; 2-pole; light gray



Item No.: 722-233/005-000
Female connector for rail-mount terminal blocks; 0.6 x 1 mm pins; angled; 100% protected against mismating; Pin spacing 5 mm; 3-pole; light gray



Item No.: 722-234/005-000
Female connector for rail-mount terminal blocks; 0.6 x 1 mm pins; angled; 100% protected against mismating; Pin spacing 5 mm; 4-pole; light gray



Item No.: 722-235/005-000
Female connector for rail-mount terminal blocks; 0.6 x 1 mm pins; angled; 100% protected against mismating; Pin spacing 5 mm; 5-pole; light gray



Item No.: 722-236/005-000
Female connector for rail-mount terminal blocks; 0.6 x 1 mm pins; angled; 100% protected against mismating; Pin spacing 5 mm; 6-pole; light gray



Item No.: 722-237/005-000
Female connector for rail-mount terminal blocks; 0.6 x 1 mm pins; angled; 100% protected against mismating; Pin spacing 5 mm; 7-pole; light gray



Item No.: 722-238/005-000
Female connector for rail-mount terminal blocks; 0.6 x 1 mm pins; angled; 100% protected against mismating; Pin spacing 5 mm; 8-pole; light gray



Item No.: 722-239/005-000
Female connector for rail-mount terminal blocks; 0.6 x 1 mm pins; angled; 100% protected against mismating; Pin spacing 5 mm; 9-pole; light gray



Item No.: 232-240/005-000/039-000
Female connector for rail-mount terminal blocks; 0.6 x 1 mm pins; angled; Locking lever; Pin spacing 5 mm; 10-pole; gray



Item No.: 232-242/005-000/039-000
Female connector for rail-mount terminal blocks; 0.6 x 1 mm pins; angled; Locking lever; Pin spacing 5 mm; 12-pole; gray



Item No.: 232-246/005-000/039-000
Female connector for rail-mount terminal blocks; 0.6 x 1 mm pins; angled; Locking lever; Pin spacing 5 mm; 16-pole; gray



Item No.: 232-250/005-000/039-000
Female connector for rail-mount terminal blocks; 0.6 x 1 mm pins; angled; Locking lever; Pin spacing 5 mm; 20-pole; gray



Item No.: 232-232/005-000/039-000
Female connector for rail-mount terminal blocks; 0.6 x 1 mm pins; angled; Locking lever; Pin spacing 5 mm; 2-pole; gray



Item No.: 232-233/005-000/039-000
Female connector for rail-mount terminal blocks; 0.6 x 1 mm pins; angled; Locking lever; Pin spacing 5 mm; 3-pole; gray



Item No.: 232-234/005-000/039-000
Female connector for rail-mount terminal blocks; 0.6 x 1 mm pins; angled; Locking lever; Pin spacing 5 mm; 4-pole; gray



Item No.: 232-235/005-000/039-000
Female connector for rail-mount terminal blocks; 0.6 x 1 mm pins; angled; Locking lever; Pin spacing 5 mm; 5-pole; gray



Item No.: 232-236/005-000/039-000
Female connector for rail-mount terminal blocks; 0.6 x 1 mm pins; angled; Locking lever; Pin spacing 5 mm; 6-pole; gray



Item No.: 232-240/005-000
Female connector for rail-mount terminal blocks; 0.6 x 1 mm pins; angled; Pin spacing 5 mm; 10-pole; gray



Item No.: 232-242/005-000
Female connector for rail-mount terminal blocks; 0.6 x 1 mm pins; angled; Pin spacing 5 mm; 12-pole; gray



Item No.: 232-246/005-000
Female connector for rail-mount terminal blocks; 0.6 x 1 mm pins; angled; Pin spacing 5 mm; 16-pole; gray



Item No.: 232-250/005-000
Female connector for rail-mount terminal blocks; 0.6 x 1 mm pins; angled; Pin spacing 5 mm; 20-pole; gray



Item No.: 232-232/005-000
Female connector for rail-mount terminal blocks; 0.6 x 1 mm pins; angled; Pin spacing 5 mm; 2-pole; gray



Item No.: 232-233/005-000
Female connector for rail-mount terminal blocks; 0.6 x 1 mm pins; angled; Pin spacing 5 mm; 3-pole; gray



Item No.: 232-234/005-000
Female connector for rail-mount terminal blocks; 0.6 x 1 mm pins; angled; Pin spacing 5 mm; 4-pole; gray



Item No.: 232-235/005-000
Female connector for rail-mount terminal blocks; 0.6 x 1 mm pins; angled; Pin spacing 5 mm; 5-pole; gray



Item No.: 232-236/005-000
Female connector for rail-mount terminal blocks; 0.6 x 1 mm pins; angled; Pin spacing 5 mm; 6-pole; gray



Item No.: 232-237/005-000
Female connector for rail-mount terminal blocks; 0.6 x 1 mm pins; angled; Pin spacing 5 mm; 7-pole; gray



Item No.: 232-238/005-000
Female connector for rail-mount terminal blocks; 0.6 x 1 mm pins; angled; Pin spacing 5 mm; 8-pole; gray



Item No.: 232-239/005-000
Female connector for rail-mount terminal blocks; 0.6 x 1 mm pins; angled; Pin spacing 5 mm; 9-pole; gray



Item No.: 722-140/005-000/039-000
Female connector for rail-mount terminal blocks; 0.6 x 1 mm pins; straight; 100% protected against mismating; Locking lever; Pin spacing 5 mm; 10-pole; light gray



Item No.: 722-144/005-000/039-000
Female connector for rail-mount terminal blocks; 0.6 x 1 mm pins; straight; 100% protected against mismating; Locking lever; Pin spacing 5 mm; 14-pole; light gray



Item No.: 722-146/005-000/039-000
Female connector for rail-mount terminal blocks; 0.6 x 1 mm pins; straight; 100% protected against mismating; Locking lever; Pin spacing 5 mm; 16-pole; light gray



Item No.: 722-150/005-000/039-000
Female connector for rail-mount terminal blocks; 0.6 x 1 mm pins; straight; 100% protected against mismating; Locking lever; Pin spacing 5 mm; 20-pole; light gray



Item No.: 722-132/005-000/039-000
Female connector for rail-mount terminal blocks; 0.6 x 1 mm pins; straight; 100% protected against mismating; Locking lever; Pin spacing 5 mm; 2-pole; light gray

Continued on next page

1.2.2.1 Female connector/socket



Item No.: 722-133/005-000/039-000
Female connector for rail-mount terminal blocks; 0.6 x 1 mm pins; straight; 100% protected against mismating; Locking lever; Pin spacing 5 mm; 3-pole; light gray



Item No.: 722-134/005-000/039-000
Female connector for rail-mount terminal blocks; 0.6 x 1 mm pins; straight; 100% protected against mismating; Locking lever; Pin spacing 5 mm; 4-pole; light gray



Item No.: 722-135/005-000/039-000
Female connector for rail-mount terminal blocks; 0.6 x 1 mm pins; straight; 100% protected against mismating; Locking lever; Pin spacing 5 mm; 5-pole; light gray



Item No.: 722-136/005-000/039-000
Female connector for rail-mount terminal blocks; 0.6 x 1 mm pins; straight; 100% protected against mismating; Locking lever; Pin spacing 5 mm; 6-pole; light gray



Item No.: 722-137/005-000/039-000
Female connector for rail-mount terminal blocks; 0.6 x 1 mm pins; straight; 100% protected against mismating; Locking lever; Pin spacing 5 mm; 7-pole; light gray



Item No.: 722-138/005-000/039-000
Female connector for rail-mount terminal blocks; 0.6 x 1 mm pins; straight; 100% protected against mismating; Locking lever; Pin spacing 5 mm; 8-pole; light gray



Item No.: 722-139/005-000/039-000
Female connector for rail-mount terminal blocks; 0.6 x 1 mm pins; straight; 100% protected against mismating; Locking lever; Pin spacing 5 mm; 9-pole; light gray



Item No.: 722-140/005-000
Female connector for rail-mount terminal blocks; 0.6 x 1 mm pins; straight; 100% protected against mismating; Pin spacing 5 mm; 10-pole; light gray



Item No.: 722-141/005-000
Female connector for rail-mount terminal blocks; 0.6 x 1 mm pins; straight; 100% protected against mismating; Pin spacing 5 mm; 11-pole; light gray



Item No.: 722-142/005-000
Female connector for rail-mount terminal blocks; 0.6 x 1 mm pins; straight; 100% protected against mismating; Pin spacing 5 mm; 12-pole; light gray



Item No.: 722-143/005-000
Female connector for rail-mount terminal blocks; 0.6 x 1 mm pins; straight; 100% protected against mismating; Pin spacing 5 mm; 13-pole; light gray



Item No.: 722-144/005-000
Female connector for rail-mount terminal blocks; 0.6 x 1 mm pins; straight; 100% protected against mismating; Pin spacing 5 mm; 14-pole; light gray



Item No.: 722-145/005-000
Female connector for rail-mount terminal blocks; 0.6 x 1 mm pins; straight; 100% protected against mismating; Pin spacing 5 mm; 15-pole; light gray



Item No.: 722-146/005-000
Female connector for rail-mount terminal blocks; 0.6 x 1 mm pins; straight; 100% protected against mismating; Pin spacing 5 mm; 16-pole; light gray



Item No.: 722-150/005-000
Female connector for rail-mount terminal blocks; 0.6 x 1 mm pins; straight; 100% protected against mismating; Pin spacing 5 mm; 20-pole; light gray



Item No.: 722-132/005-000
Female connector for rail-mount terminal blocks; 0.6 x 1 mm pins; straight; 100% protected against mismating; Pin spacing 5 mm; 2-pole; light gray



Item No.: 722-133/005-000
Female connector for rail-mount terminal blocks; 0.6 x 1 mm pins; straight; 100% protected against mismating; Pin spacing 5 mm; 3-pole; light gray



Item No.: 722-134/005-000
Female connector for rail-mount terminal blocks; 0.6 x 1 mm pins; straight; 100% protected against mismating; Pin spacing 5 mm; 4-pole; light gray



Item No.: 722-135/005-000
Female connector for rail-mount terminal blocks; 0.6 x 1 mm pins; straight; 100% protected against mismating; Pin spacing 5 mm; 5-pole; light gray



Item No.: 722-136/005-000
Female connector for rail-mount terminal blocks; 0.6 x 1 mm pins; straight; 100% protected against mismating; Pin spacing 5 mm; 6-pole; light gray



Item No.: 722-137/005-000
Female connector for rail-mount terminal blocks; 0.6 x 1 mm pins; straight; 100% protected against mismating; Pin spacing 5 mm; 7-pole; light gray



Item No.: 722-138/005-000
Female connector for rail-mount terminal blocks; 0.6 x 1 mm pins; straight; 100% protected against mismating; Pin spacing 5 mm; 8-pole; light gray



Item No.: 722-139/005-000
Female connector for rail-mount terminal blocks; 0.6 x 1 mm pins; straight; 100% protected against mismating; Pin spacing 5 mm; 9-pole; light gray



Item No.: 232-140/005-000/039-000
Female connector for rail-mount terminal blocks; 0.6 x 1 mm pins; straight; Locking lever; Pin spacing 5 mm; 10-pole; gray



Item No.: 232-142/005-000/039-000
Female connector for rail-mount terminal blocks; 0.6 x 1 mm pins; straight; Locking lever; Pin spacing 5 mm; 12-pole; gray



Item No.: 232-146/005-000/039-000
Female connector for rail-mount terminal blocks; 0.6 x 1 mm pins; straight; Locking lever; Pin spacing 5 mm; 16-pole; gray



Item No.: 232-150/005-000/039-000
Female connector for rail-mount terminal blocks; 0.6 x 1 mm pins; straight; Locking lever; Pin spacing 5 mm; 20-pole; gray



Item No.: 232-132/005-000/039-000
Female connector for rail-mount terminal blocks; 0.6 x 1 mm pins; straight; Locking lever; Pin spacing 5 mm; 2-pole; gray



Item No.: 232-133/005-000/039-000
Female connector for rail-mount terminal blocks; 0.6 x 1 mm pins; straight; Locking lever; Pin spacing 5 mm; 3-pole; gray



Item No.: 232-134/005-000/039-000
Female connector for rail-mount terminal blocks; 0.6 x 1 mm pins; straight; Locking lever; Pin spacing 5 mm; 4-pole; gray



Item No.: 232-135/005-000/039-000
Female connector for rail-mount terminal blocks; 0.6 x 1 mm pins; straight; Locking lever; Pin spacing 5 mm; 5-pole; gray



Item No.: 232-136/005-000/039-000
Female connector for rail-mount terminal blocks; 0.6 x 1 mm pins; straight; Locking lever; Pin spacing 5 mm; 6-pole; gray



Item No.: 232-137/005-000/039-000
Female connector for rail-mount terminal blocks; 0.6 x 1 mm pins; straight; Locking lever; Pin spacing 5 mm; 7-pole; gray



Item No.: 232-138/005-000/039-000
Female connector for rail-mount terminal blocks; 0.6 x 1 mm pins; straight; Locking lever; Pin spacing 5 mm; 8-pole; gray



Item No.: 232-139/005-000/039-000
Female connector for rail-mount terminal blocks; 0.6 x 1 mm pins; straight; Locking lever; Pin spacing 5 mm; 9-pole; gray



Item No.: 232-140/005-000
Female connector for rail-mount terminal blocks; 0.6 x 1 mm pins; straight; Pin spacing 5 mm; 10-pole; gray



Item No.: 232-142/005-000
Female connector for rail-mount terminal blocks; 0.6 x 1 mm pins; straight; Pin spacing 5 mm; 12-pole; gray



Item No.: 232-146/005-000
Female connector for rail-mount terminal blocks; 0.6 x 1 mm pins; straight; Pin spacing 5 mm; 16-pole; gray



Item No.: 232-150/005-000
Female connector for rail-mount terminal blocks; 0.6 x 1 mm pins; straight; Pin spacing 5 mm; 20-pole; gray



Item No.: 232-132/005-000
Female connector for rail-mount terminal blocks; 0.6 x 1 mm pins; straight; Pin spacing 5 mm; 2-pole; gray

Continued on next page

1.2.2.1 Female connector/socket



Item No.: 232-133/005-000
Female connector for rail-mount terminal blocks; 0.6 x 1 mm pins; straight; Pin spacing 5 mm; 3-pole; gray



Item No.: 232-134/005-000
Female connector for rail-mount terminal blocks; 0.6 x 1 mm pins; straight; Pin spacing 5 mm; 4-pole; gray



Item No.: 232-135/005-000
Female connector for rail-mount terminal blocks; 0.6 x 1 mm pins; straight; Pin spacing 5 mm; 5-pole; gray



Item No.: 232-136/005-000
Female connector for rail-mount terminal blocks; 0.6 x 1 mm pins; straight; Pin spacing 5 mm; 6-pole; gray



Item No.: 232-137/005-000
Female connector for rail-mount terminal blocks; 0.6 x 1 mm pins; straight; Pin spacing 5 mm; 7-pole; gray



Item No.: 232-138/005-000
Female connector for rail-mount terminal blocks; 0.6 x 1 mm pins; straight; Pin spacing 5 mm; 8-pole; gray



Item No.: 232-139/005-000
Female connector for rail-mount terminal blocks; 0.6 x 1 mm pins; straight; Pin spacing 5 mm; 9-pole; gray

1.2.3 Ferrule

1.2.3.1 Ferrule



Item No.: 216-301
Ferrule; Sleeve for 0.25 mm² / AWG 24; insulated; electro-tin plated; yellow

Item No.: 216-302
Ferrule; Sleeve for 0.34 mm² / 22 AWG; insulated; electro-tin plated; light turquoise

Item No.: 216-201
Ferrule; Sleeve for 0.5 mm² / 20 AWG; insulated; electro-tin plated; electrolytic copper; acc. to DIN 46228, Part 4/09.90; white



Item No.: 216-101
Ferrule; Sleeve for 0.5 mm² / AWG 22; uninsulated; electro-tin plated; silver-colored

Item No.: 216-202
Ferrule; Sleeve for 0.75 mm² / 18 AWG; insulated; electro-tin plated; gray



Item No.: 216-102
Ferrule; Sleeve for 0.75 mm² / 18 AWG; uninsulated; electro-tin plated; silver-colored

Item No.: 216-203
Ferrule; Sleeve for 1 mm² / AWG 18; insulated; electro-tin plated; red



Item No.: 216-103
Ferrule; Sleeve for 1 mm² / AWG 18; uninsulated; electro-tin plated



Item No.: 216-204
Ferrule; Sleeve for 1.5 mm² / AWG 16; insulated; electro-tin plated; black



Item No.: 216-104
Ferrule; Sleeve for 1.5 mm² / AWG 16; uninsulated; electro-tin plated; silver-colored

1.2.4 Installation

1.2.4.1 Cover



Item No.: 709-154
Cover; Type 2; suitable for cover carrier, type 2; 1 m long; transparent

1.2.4.2 Cover carrier



Item No.: 709-168
Cover carrier; Type 2; incl. fixing/retaining screws and knurled nut; suitable for 283 to 285 Series rail-mounted terminal blocks; suitable for 279 to 281 Series double- and triple-deck terminal blocks; suitable for 780 to 785, 775, 776 and 777 Series TOPJOB® rail-mounted terminal blocks; suitable for 280 Series sensor and actuator terminal blocks; suitable for 282 Series disconnect/test terminal blocks for transformer circuits; gray

Continued on next page

1.2.4.3 Mounting accessories



Item No.: 209-106
Mounting carrier; for isolated mounting on DIN 35 rails; gray



Item No.: 249-116
Screwless end stop; 6 mm wide; for DIN-rail 35 x 15 and 35 x 7.5; gray

1.2.5 Insulation stop

1.2.5.1 Insulation stop



Item No.: 280-470
Insulation stop; 0.08 - 0.2 mm² "s" (0.14 mm² "f-st"); 5 pieces/strip; white



Item No.: 280-471
Insulation stop; 0.25 - 0.5 mm²; 5 pieces/strip; light gray



Item No.: 280-472
Insulation stop; 0.75 - 1 mm²; 5 pieces/strip; black

1.2.6 Jumper

1.2.6.1 Jumper



Item No.: 280-490
Jumper; 10-way; insulated; gray



Item No.: 280-482
Jumper; 2-way; insulated; gray



Item No.: 280-492
Jumper; 2-way; insulated; gray



Item No.: 280-483
Jumper; 3-way; insulated; gray



Item No.: 280-484
Jumper; 4-way; insulated; gray



Item No.: 280-485
Jumper; 5-way; insulated; gray



Item No.: 210-103
Wire commoning chain; 0.5 mm²; insulated; black



Item No.: 709-110
Wire commoning chain; 2.5 mm²; insulated; black



Item No.: 709-111
Wire commoning chain; 2.5 mm²; insulated; black



Item No.: 709-112
Wire commoning chain; 2.5 mm²; insulated; black



Item No.: 210-123
Wire commoning chain; insulated; blue

1.2.7 Male connector

1.2.7.1 Male connector/plug



Item No.: 231-170/003-000
Male connector for rail-mount terminal blocks; 1.2 x 1.2 mm pins; straight; Pin spacing 5 mm; 10-pole; gray



Item No.: 231-171/003-000
Male connector for rail-mount terminal blocks; 1.2 x 1.2 mm pins; straight; Pin spacing 5 mm; 11-pole; gray



Item No.: 231-172/003-000
Male connector for rail-mount terminal blocks; 1.2 x 1.2 mm pins; straight; Pin spacing 5 mm; 12-pole; gray



Item No.: 231-176/003-000
Male connector for rail-mount terminal blocks; 1.2 x 1.2 mm pins; straight; Pin spacing 5 mm; 16-pole; gray



Item No.: 231-162/003-000
Male connector for rail-mount terminal blocks; 1.2 x 1.2 mm pins; straight; Pin spacing 5 mm; 2-pole; gray



Item No.: 231-163/003-000
Male connector for rail-mount terminal blocks; 1.2 x 1.2 mm pins; straight; Pin spacing 5 mm; 3-pole; gray



Item No.: 231-164/003-000
Male connector for rail-mount terminal blocks; 1.2 x 1.2 mm pins; straight; Pin spacing 5 mm; 4-pole; gray



Item No.: 231-165/003-000
Male connector for rail-mount terminal blocks; 1.2 x 1.2 mm pins; straight; Pin spacing 5 mm; 5-pole; gray



Item No.: 231-166/003-000
Male connector for rail-mount terminal blocks; 1.2 x 1.2 mm pins; straight; Pin spacing 5 mm; 6-pole; gray



Item No.: 231-167/003-000
Male connector for rail-mount terminal blocks; 1.2 x 1.2 mm pins; straight; Pin spacing 5 mm; 7-pole; gray



Item No.: 231-168/003-000
Male connector for rail-mount terminal blocks; 1.2 x 1.2 mm pins; straight; Pin spacing 5 mm; 8-pole; gray



Item No.: 231-169/003-000
Male connector for rail-mount terminal blocks; 1.2 x 1.2 mm pins; straight; Pin spacing 5 mm; 9-pole; gray

Continued on next page

1.2.8 Marking

1.2.8.1 Marker



Item No.: 793-5501/000-006
WMB marking card; as card; for terminal block width 5 - 17.5 mm; stretchable 5 - 5.2 mm; plain; snap-on type; blue



Item No.: 793-5501/000-007
WMB marking card; as card; for terminal block width 5 - 17.5 mm; stretchable 5 - 5.2 mm; plain; snap-on type; gray



Item No.: 793-5501/000-023
WMB marking card; as card; for terminal block width 5 - 17.5 mm; stretchable 5 - 5.2 mm; plain; snap-on type; green



Item No.: 793-5501/000-017
WMB marking card; as card; for terminal block width 5 - 17.5 mm; stretchable 5 - 5.2 mm; plain; snap-on type; light green



Item No.: 793-5501/000-012
WMB marking card; as card; for terminal block width 5 - 17.5 mm; stretchable 5 - 5.2 mm; plain; snap-on type; orange



Item No.: 793-5501/000-005
WMB marking card; as card; for terminal block width 5 - 17.5 mm; stretchable 5 - 5.2 mm; plain; snap-on type; red



Item No.: 793-5501/000-024
WMB marking card; as card; for terminal block width 5 - 17.5 mm; stretchable 5 - 5.2 mm; plain; snap-on type; violet

Item No.: 793-5501
WMB marking card; as card; for terminal block width 5 - 17.5 mm; stretchable 5 - 5.2 mm; plain; snap-on type; white



Item No.: 793-5501/000-002
WMB marking card; as card; for terminal block width 5 - 17.5 mm; stretchable 5 - 5.2 mm; plain; snap-on type; yellow



Item No.: 793-501/000-006
WMB marking card; as card; not stretchable; plain; snap-on type; blue



Item No.: 793-501/000-007
WMB marking card; as card; not stretchable; plain; snap-on type; gray



Item No.: 793-501/000-023
WMB marking card; as card; not stretchable; plain; snap-on type; green



Item No.: 793-501/000-017
WMB marking card; as card; not stretchable; plain; snap-on type; light green



Item No.: 793-501/000-012
WMB marking card; as card; not stretchable; plain; snap-on type; orange



Item No.: 793-501/000-005
WMB marking card; as card; not stretchable; plain; snap-on type; red



Item No.: 793-501/000-024
WMB marking card; as card; not stretchable; plain; snap-on type; violet

Item No.: 793-501
WMB marking card; as card; not stretchable; plain; snap-on type; white



Item No.: 793-501/000-002
WMB marking card; as card; not stretchable; plain; snap-on type; yellow



Item No.: 2009-115/000-006
WMB-Inline; for Smart Printer; 1500 pieces on roll; stretchable 5 - 5.2 mm; plain; snap-on type; blue



Item No.: 2009-115/000-007
WMB-Inline; for Smart Printer; 1500 pieces on roll; stretchable 5 - 5.2 mm; plain; snap-on type; gray



Item No.: 2009-115/000-023
WMB-Inline; for Smart Printer; 1500 pieces on roll; stretchable 5 - 5.2 mm; plain; snap-on type; green



Item No.: 2009-115/000-017
WMB-Inline; for Smart Printer; 1500 pieces on roll; stretchable 5 - 5.2 mm; plain; snap-on type; light green



Item No.: 2009-115/000-012
WMB-Inline; for Smart Printer; 1500 pieces on roll; stretchable 5 - 5.2 mm; plain; snap-on type; orange



Item No.: 2009-115/000-024
WMB-Inline; for Smart Printer; 1500 pieces on roll; stretchable 5 - 5.2 mm; plain; snap-on type; violet



Item No.: 2009-115
WMB-Inline; for Smart Printer; 1500 pieces on roll; stretchable 5 - 5.2 mm; plain; snap-on type; white



Item No.: 2009-115/000-002
WMB-Inline; for Smart Printer; 1500 pieces on roll; stretchable 5 - 5.2 mm; plain; snap-on type; yellow

1.2.9 Protective warning marker

1.2.9.1 Cover



Item No.: 280-415
Protective warning marker; for 5 terminal blocks; with high-voltage symbol, black; yellow

Continued on next page

1.2.10 Tool

1.2.10.1 Operating tool



Item No.: 210-658
Operating tool; Blade: 3.5 x 0.5 mm; with a partially insulated shaft; angled; short; multicoloured



Item No.: 210-720
Operating tool; Blade: 3.5 x 0.5 mm; with a partially insulated shaft; multicoloured



Item No.: 210-657
Operating tool; Blade: 3.5 x 0.5 mm; with a partially insulated shaft; short; multicoloured

Installation Notes

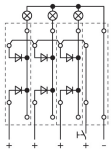

Lamp test circuits can be created using the following terminal blocks:
280-942/281-487 or 280-942/281-488