Data Sheet | Item Number: 281-659

4-conductor disconnect terminal block; for DIN-rail 35 x 15 and 35 x 7.5; 4 mm²; CAGE CLAMP®; 4,00 mm²; gray

https://www.wago.com/281-659

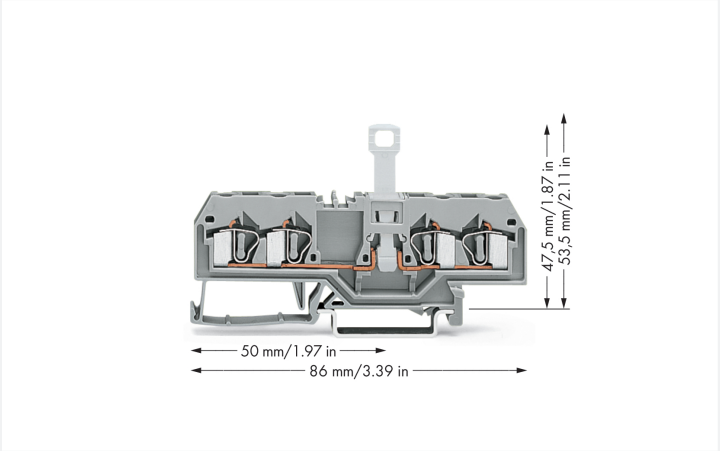

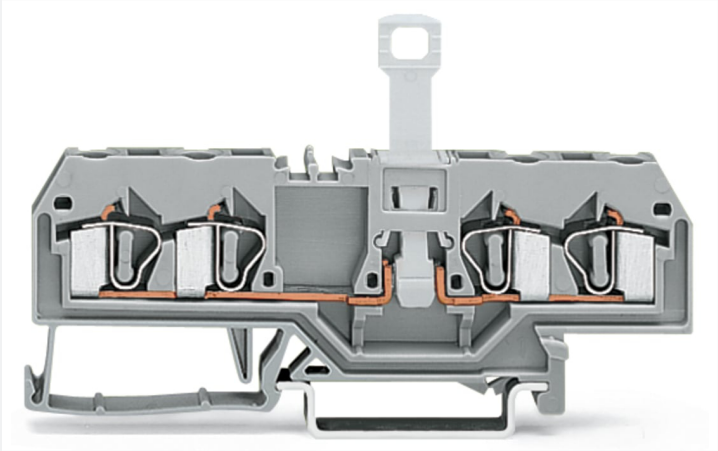

Color: gray

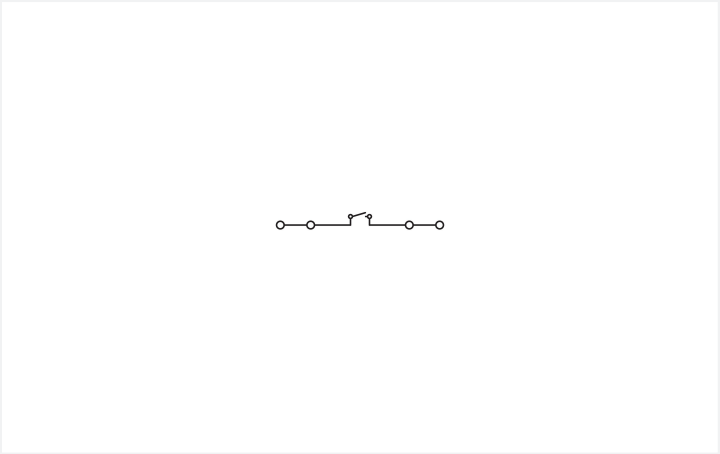

Similar to illustration

Disconnect terminal block, 281 Series, gray

Our disconnect terminal block (item number 281-659) makes connecting wires quick and easy. Conductors should only be connected to this disconnect terminal block if their strip length is between 9 and 10 mm . Featuring conductor terminals along with CAGE CLAMP®, this product delivers reliable performance. Our tried-and-tested universal connection known as CAGE CLAMP® leads the way when it comes to connection technology and electrical interconnections. This disconnect terminal block is suitable for conductor cross sections ranging from 0.08 mm² to 4 mm².

Electrical data

Ratings per IEC/EN

Nominal voltage (III/3)	400 V
Rated impulse withstand voltage (III / 3)	6 kV
Rated current	10 A
Legend (ratings)	(III / 3) ≙ Overvoltage category III / Pollution degree 3

Power Loss

Power loss, per pole (potential)	0.1 W
Rated current I_N for power loss specification	10 A
Resistance value for specified, current-dependent power loss	0.001 Ω

General information

Wiring direction	Front-entry wiring

Connection Data

Clamping units	4
Total number of potentials	2
Number of levels	1

Connection 1

Connection technology	CAGE CLAMP®
Actuation type	Operating tool
Connectable conductor materials	Copper Aluminum
Connectable conductor materials (note)	**Terminating Aluminum Conductors** WAGO Spring-Clamp Terminal Blocks are suitable for solid aluminum conductors up to 4 mm²/12 AWG if WAGO Aluminum Contact Paste 249-130 is used for termination. Aluminum Contact Paste Advantages: ▪ Automatically destroys the oxide film during clamping. ▪ Prevents fresh oxidation at the clamping point. ▪ Prevents electrolytic corrosion between aluminum and copper conductors (in the same terminal block). ▪ Provides long-term protection against corrosion. Using terminal blocks with CAGE CLAMP® Spring Pressure Connection Technology, **aluminum conductors must first be cleaned with a blade** and then immediately inserted into the clamping units filled with aluminum contact paste. It is also possible to apply WAGO Aluminum Contact Paste **additionally** on the whole surface of the aluminum conductor before termination. Please note that the nominal currents must be adapted to the reduced conductivity of the aluminum conductors:: 2.5 mm² = 16 A 4 mm² = 22 A
Solid conductor	0.08 … 4 mm² / 28 … 12 AWG
Fine-stranded conductor	0.08 … 4 mm² / 28 … 12 AWG
Strip length	9 … 10 mm / 0.35 … 0.39 inches
Wiring direction	Front-entry wiring

Physical data

Width	6 mm / 0.236 inches
Height	86 mm / 3.386 inches
Depth from upper-edge of DIN-rail	53.5 mm / 2.106 inches

Continued on next page

Mechanical data

Design	horizontal type
Mounting type	DIN-35 rail
Marking level	Center marking

Material data

Note (material data)	Information on material specifications can be found here
Color	gray
Material group	I
Insulation material (main housing)	Polyamide (PA66)
Flammability class per UL94	V0
Fire load	0.197 MJ
Weight	13.3 g

Environmental requirements

Processing temperature	-35 … +85 °C
Continuous operating temperature	-60 … +105 °C

Commercial data

Product Group	1 (Rail Mounted Terminal Blocks)
PU (SPU)	50 pcs
Packaging type	Box
Country of origin	DE
GTIN	4044918837781
Customs tariff number	85365080000

Product Classification

UNSPSC	39121410
eCl@ss 10.0	27-14-11-26
eCl@ss 9.0	27-14-11-26
ETIM 9.0	EC000902
ETIM 10.0	EC000902
ECCN	NO US CLASSIFICATION

Environmental Product Compliance

RoHS Compliance Status	Compliant,No Exemption

Approvals / Certificates

General approvals

Approval	Standard	Certificate Name
CCA DEKRA Certification B.V.	EN 60947	NTR NL-7727
CSA CSA Group	C22.2	1505034
KEMA/KEUR DEKRA Certification B.V.	EN 60947	71-107288

General approvals

UL Underwriters Laboratories Inc.	UL 1059	20190731-E45172

Continued on next page

Declarations of conformity and manufacturer's declarations

Approval	Standard	Certificate Name
EU-Declaration of Conformity WAGO GmbH & Co. KG	-	-

Approvals for marine applications

Approval	Standard	Certificate Name
ABS American Bureau of Shipping	-	24-0152298-PDA
BV Bureau Veritas S.A.	EN 60947	07436/G0 BV
DNV GL Det Norske Veritas, Germanischer Lloyd	-	TAE00001V2
PRS Polski Rejestr Statków	-	TE/1094/880590/23

Downloads

Environmental Product Compliance

Compliance Search

Environmental Product Compliance 281-659

Documentation

Bid Text

281-659	19.02.2019	xml 3.13 KB
281-659	02.03.2017	doc 24.50 KB

CAD/CAE-Data

CAD data

2D/3D Models 281-659

CAE data

EPLAN Data Portal 281-659

WSCAD Universe 281-659

ZUKEN Portal 281-659

Continued on next page

1 Compatible Products

1.1 Required Accessories

1.1.1 End plate

1.1.1.1 End plate



Item No.: 281-334
End and intermediate plate; 2.5 mm thick; gray



Item No.: 281-335
End and intermediate plate; 2.5 mm thick; orange



Item No.: 281-338
Separator plate; 2 mm thick; oversized; gray



Item No.: 281-339
Separator plate; 2 mm thick; oversized; orange

1.2 Optional Accessories

1.2.1 DIN-rail

1.2.1.1 Mounting accessories



Item No.: 210-196
Aluminum carrier rail; 35 x 8.2 mm; 1.6 mm thick; 2 m long; unslotted; similar to EN 60715; silver-colored



Item No.: 210-198
Copper carrier rail; 35 x 15 mm; 2.3 mm thick; 2 m long; unslotted; according to EN 60715; copper-colored



Item No.: 210-508
Steel carrier rail; 35 x 15 mm; 1.5 mm thick; 2 m long; slotted; galvanized; similar to EN 60715; silver-colored



Item No.: 210-197
Steel carrier rail; 35 x 15 mm; 1.5 mm thick; 2 m long; slotted; similar to EN 60715; silver-colored



Item No.: 210-506
Steel carrier rail; 35 x 15 mm; 1.5 mm thick; 2 m long; unslotted; galvanized; similar to EN 60715; silver-colored



Item No.: 210-114
Steel carrier rail; 35 x 15 mm; 1.5 mm thick; 2 m long; unslotted; similar to EN 60715; silver-colored



Item No.: 210-118
Steel carrier rail; 35 x 15 mm; 2.3 mm thick; 2 m long; unslotted; according to EN 60715; silver-colored



Item No.: 210-115
Steel carrier rail; 35 x 7.5 mm; 1 mm thick; 2 m long; slotted; according to EN 60715; "Hole width 18 mm; silver-colored



Item No.: 210-112
Steel carrier rail; 35 x 7.5 mm; 1 mm thick; 2 m long; slotted; according to EN 60715; "Hole width 25 mm; silver-colored



Item No.: 210-504
Steel carrier rail; 35 x 7.5 mm; 1 mm thick; 2 m long; slotted; galvanized; according to EN 60715; silver-colored



Item No.: 210-113
Steel carrier rail; 35 x 7.5 mm; 1 mm thick; 2 m long; unslotted; according to EN 60715; silver-colored



Item No.: 210-505
Steel carrier rail; 35 x 7.5 mm; 1 mm thick; 2 m long; unslotted; galvanized; according to EN 60715; silver-colored

1.2.2 Ferrule

1.2.2.1 Ferrule

Item No.: 216-241
Ferrule; Sleeve for 0.5 mm² / 20 AWG; insulated; electro-tin plated; electrolytic copper; gastight crimped; acc. to DIN 46228, Part 4/09.90; white

Item No.: 216-242
Ferrule; Sleeve for 0.75 mm² / 18 AWG; insulated; electro-tin plated; electrolytic copper; gastight crimped; acc. to DIN 46228, Part 4/09.90; gray

Item No.: 216-243
Ferrule; Sleeve for 1 mm² / AWG 18; insulated; electro-tin plated; electrolytic copper; gastight crimped; acc. to DIN 46228, Part 4/09.90; red



Item No.: 216-244
Ferrule; Sleeve for 1.5 mm² / AWG 16; insulated; electro-tin plated; electrolytic copper; gastight crimped; acc. to DIN 46228, Part 4/09.90; black



Item No.: 216-246
Ferrule; Sleeve for 2.5 mm² / AWG 14; insulated; electro-tin plated; electrolytic copper; gastight crimped; acc. to DIN 46228, Part 4/09.90; blue



Item No.: 216-106
Ferrule; Sleeve for 2.5 mm² / AWG 14; uninsulated; electro-tin plated; silver-colored

Continued on next page

1.2.3 Installation

1.2.3.1 Cover



Item No.: 709-154
Cover; Type 2; suitable for cover carrier, type 2; 1 m long; transparent

1.2.3.2 Cover carrier



Item No.: 709-168
Cover carrier; Type 2; incl. fixing/retaining screws and knurled nut; suitable for 283 to 285 Series rail-mounted terminal blocks; suitable for 279 to 281 Series double- and triple-deck terminal blocks; suitable for 780 to 785, 775, 776 and 777 Series TOPJOB® rail-mounted terminal blocks; suitable for 280 Series sensor and actuator terminal blocks; suitable for 282 Series disconnect/ test terminal blocks for transformer circuits; gray

1.2.3.3 Mounting accessories



Item No.: 209-106
Mounting carrier; for isolated mounting on DIN 35 rails; gray



Item No.: 249-116
Screwless end stop; 6 mm wide; for DIN-rail 35 x 15 and 35 x 7.5; gray

1.2.4 Insulation stop

1.2.4.1 Insulation stop



Item No.: 281-470
Insulation stop; 0.08 - 0.2 mm² "s" (0.14 mm² "f-st"); 5 pieces/strip; white



Item No.: 281-471
Insulation stop; 0.25 - 0.5 mm²; 5 pieces/ strip; light gray



Item No.: 281-472
Insulation stop; 0.75 - 1.5 mm²; 5 pieces/ strip; dark gray

1.2.5 Jumper

1.2.5.1 Jumper



Item No.: 281-490
Jumper; 10-way; insulated; gray



Item No.: 281-482
Jumper; 2-way; insulated; gray



Item No.: 281-492
Jumper; 2-way; insulated; gray



Item No.: 281-483
Jumper; 3-way; insulated; gray



Item No.: 281-485
Jumper; 5-way; insulated; gray



Item No.: 210-103
Wire commoning chain; 0.5 mm²; insulated; black



Item No.: 709-110
Wire commoning chain; 2.5 mm²; insulated; black



Item No.: 709-111
Wire commoning chain; 2.5 mm²; insulated; black



Item No.: 709-112
Wire commoning chain; 2.5 mm²; insulated; black



Item No.: 210-123
Wire commoning chain; insulated; blue

Continued on next page

1.2.6 Lock-out

1.2.6.1 Locking system



Item No.: 709-170
Disconnect lock; for disconnect tab used on 280/281 and 769 Series disconnect terminal blocks; red

1.2.7 Marking

1.2.7.1 Group marker carrier



Item No.: 249-105
Group marker carrier; gray

1.2.7.2 Marker



Item No.: 793-5501/000-006
WMB marking card; as card; for terminal block width 5 - 17.5 mm; stretchable 5 - 5.2 mm; plain; snap-on type; blue



Item No.: 793-5501/000-007
WMB marking card; as card; for terminal block width 5 - 17.5 mm; stretchable 5 - 5.2 mm; plain; snap-on type; gray



Item No.: 793-5501/000-023
WMB marking card; as card; for terminal block width 5 - 17.5 mm; stretchable 5 - 5.2 mm; plain; snap-on type; green



Item No.: 793-5501/000-017
WMB marking card; as card; for terminal block width 5 - 17.5 mm; stretchable 5 - 5.2 mm; plain; snap-on type; light green



Item No.: 793-5501/000-012
WMB marking card; as card; for terminal block width 5 - 17.5 mm; stretchable 5 - 5.2 mm; plain; snap-on type; orange



Item No.: 793-5501/000-005
WMB marking card; as card; for terminal block width 5 - 17.5 mm; stretchable 5 - 5.2 mm; plain; snap-on type; red



Item No.: 793-5501/000-024
WMB marking card; as card; for terminal block width 5 - 17.5 mm; stretchable 5 - 5.2 mm; plain; snap-on type; violet

Item No.: 793-5501
WMB marking card; as card; for terminal block width 5 - 17.5 mm; stretchable 5 - 5.2 mm; plain; snap-on type; white



Item No.: 793-5501/000-002
WMB marking card; as card; for terminal block width 5 - 17.5 mm; stretchable 5 - 5.2 mm; plain; snap-on type; yellow



Item No.: 793-501/000-006
WMB marking card; as card; not stretchable; plain; snap-on type; blue



Item No.: 793-501/000-007
WMB marking card; as card; not stretchable; plain; snap-on type; gray



Item No.: 793-501/000-023
WMB marking card; as card; not stretchable; plain; snap-on type; green



Item No.: 793-501/000-017
WMB marking card; as card; not stretchable; plain; snap-on type; light green



Item No.: 793-501/000-012
WMB marking card; as card; not stretchable; plain; snap-on type; orange



Item No.: 793-501/000-005
WMB marking card; as card; not stretchable; plain; snap-on type; red



Item No.: 793-501/000-024
WMB marking card; as card; not stretchable; plain; snap-on type; violet

Item No.: 793-501
WMB marking card; as card; not stretchable; plain; snap-on type; white



Item No.: 793-501/000-002
WMB marking card; as card; not stretchable; plain; snap-on type; yellow



Item No.: 2009-115/000-006
WMB-Inline; for Smart Printer; 1500 pieces on roll; stretchable 5 - 5.2 mm; plain; snap-on type; blue



Item No.: 2009-115/000-007
WMB-Inline; for Smart Printer; 1500 pieces on roll; stretchable 5 - 5.2 mm; plain; snap-on type; gray



Item No.: 2009-115/000-023
WMB-Inline; for Smart Printer; 1500 pieces on roll; stretchable 5 - 5.2 mm; plain; snap-on type; green



Item No.: 2009-115/000-017
WMB-Inline; for Smart Printer; 1500 pieces on roll; stretchable 5 - 5.2 mm; plain; snap-on type; light green



Item No.: 2009-115/000-012
WMB-Inline; for Smart Printer; 1500 pieces on roll; stretchable 5 - 5.2 mm; plain; snap-on type; orange



Item No.: 2009-115/000-024
WMB-Inline; for Smart Printer; 1500 pieces on roll; stretchable 5 - 5.2 mm; plain; snap-on type; violet



Item No.: 2009-115
WMB-Inline; for Smart Printer; 1500 pieces on roll; stretchable 5 - 5.2 mm; plain; snap-on type; white



Item No.: 2009-115/000-002
WMB-Inline; for Smart Printer; 1500 pieces on roll; stretchable 5 - 5.2 mm; plain; snap-on type; yellow

Continued on next page

1.2.8 Protective warning marker

1.2.8.1 Cover



Item No.: 281-415
Protective warning marker; for 5 terminal blocks; with high-voltage symbol, black; yellow

1.2.9 Test and measurement

1.2.9.1 Testing accessories



Item No.: 210-136
Test plug; 2 mm Ø; with 500 mm cable; red



Item No.: 209-107
Test socket; insulated; 2 mm Ø; red



Item No.: 209-108
Test socket; insulated; 2.3 mm Ø; yellow

1.2.10 Tool

1.2.10.1 Operating tool



Item No.: 210-658
Operating tool; Blade: 3.5 x 0.5 mm; with a partially insulated shaft; angled; short; multicoloured



Item No.: 210-720
Operating tool; Blade: 3.5 x 0.5 mm; with a partially insulated shaft; multicoloured



Item No.: 210-657
Operating tool; Blade: 3.5 x 0.5 mm; with a partially insulated shaft; short; multicoloured

Installation Notes

Security

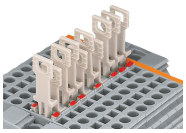

Disconnect terminal block with colored tab to indicate the switching status
(red = disconnected)

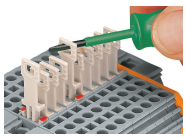

Pulling the disconnect tab via operating tool.



Pulling the disconnect tab by hand.