Data Sheet | Item Number: 281-915/281-410

Component terminal block; 2-conductor; with diode 1N4007; anode, left side; for DIN-rail 35 x 15 and 35 x 7.5; 4 mm²; CAGE CLAMP®; gray

https://www.wago.com/281-915/281-410

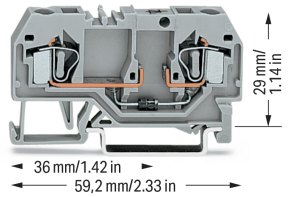

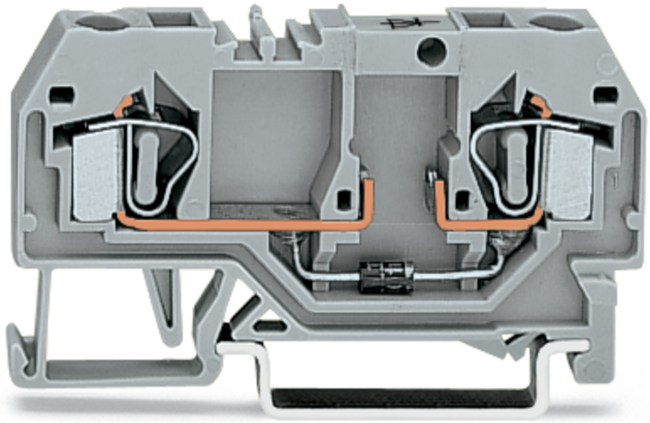

Color: gray

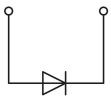

Component terminal block with diode, 281 Series, gray

This component terminal block with diode (item number 281-915/281-410) is designed for quick and simple connections. Strip lengths must be between 9 and 10 mm when connecting conductors to this component terminal block with diode. Featuring conductor terminals along with CAGE CLAMP®, this connector delivers reliable performance. Our reliable and maintenance-free CAGE CLAMP® connection makes it easy to connect all types of conductors without having to prepare the conductor. For example, you don't need to crimp ferrules. This component terminal block with diode is suitable for conductor cross sections ranging from 0.08 mm² to 4 mm².

Electrical data

Ratings per	IEC/EN 60947-7-1		
Overvoltage category	III	III	II
Pollution degree	3	2	2
Nominal voltage	-	-	-
Rated impulse withstand voltage	-	-	-
Rated current	-	-	-

General information	
Nominal voltage	250 V
Reverse voltage	1000 V
Number/type of diode/LED	with 1N4007 diode
Wiring direction	Front-entry wiring
Alignment	Left-side anode

Connection Data

Clamping units	2
Total number of potentials	1
Number of levels	1

Connection 1

Connection technology	CAGE CLAMP®
Actuation type	Operating tool
Connectable conductor materials	Copper Aluminum
Connectable conductor materials (note)	**Terminating Aluminum Conductors** WAGO Spring-Clamp Terminal Blocks are suitable for solid aluminum conductors up to 4 mm²/12 AWG if WAGO Aluminum Contact Paste 249-130 is used for termination. Aluminum Contact Paste Advantages: ▪ Automatically destroys the oxide film during clamping. ▪ Prevents fresh oxidation at the clamping point. ▪ Prevents electrolytic corrosion between aluminum and copper conductors (in the same terminal block). ▪ Provides long-term protection against corrosion. Using terminal blocks with CAGE CLAMP® Spring Pressure Connection Technology, **aluminum conductors must first be cleaned with a blade** and then immediately inserted into the clamping units filled with aluminum contact paste. It is also possible to apply WAGO Aluminum Contact Paste **additionally** on the whole surface of the aluminum conductor before termination. Please note that the nominal currents must be adapted to the reduced conductivity of the aluminum conductors:: 2.5 mm² = 16 A 4 mm² = 22 A
Solid conductor	0.08 … 4 mm² / 28 … 12 AWG
Fine-stranded conductor	0.08 … 4 mm² / 28 … 12 AWG
Strip length	9 … 10 mm / 0.35 … 0.39 inches
Wiring direction	Front-entry wiring

Physical data

Width	6 mm / 0.236 inches
Height	59.2 mm / 2.331 inches
Depth from upper-edge of DIN-rail	29 mm / 1.142 inches

Mechanical data

Design	horizontal type
Mounting type	DIN-35 rail
Marking level	Center marking

Continued on next page

Material data

Note (material data)	Information on material specifications can be found here
Color	gray
Material group	I
Insulation material (main housing)	Polyamide (PA66)
Flammability class per UL94	V0
Fire load	0.142 MJ
Weight	8.2 g

Environmental requirements

Processing temperature	-35 … +85 °C
Continuous operating temperature	-60 … +105 °C

Commercial data

Product Group	1 (Rail Mounted Terminal Blocks)
PU (SPU)	50 pcs
Packaging type	Box
Country of origin	DE
GTIN	4045454197780
Customs tariff number	85369010000

Product Classification

UNSPSC	39121410
eCl@ss 10.0	27-14-11-27
eCl@ss 9.0	27-14-11-27
ETIM 9.0	EC000903
ETIM 10.0	EC000903
ECCN	NO US CLASSIFICATION

Environmental Product Compliance

CAS-No.	7439-92-1 79-94-7
REACH Candidate List Substance	2,2',6,6'-tetrabromo-4,4'-isopropylidenediphenol Lead
RoHS Compliance Status	Compliant,With Exemption
RoHS Exemption	7(a)
SCIP notification number (Austria)	bb2bac44-5a43-471f-906d-6d281c936eef
SCIP notification number (Belgium)	17aabe28-04ce-4206-b8dd-577589bdfbf5
SCIP notification number (Bulgaria)	9c219fba-0755-47d1-b880-bc130982ffa0
SCIP notification number (Czech Republic)	6ae36268-712e-4573-a7a0-0ab460d02543
SCIP notification number (Denmark)	17809f66-94a1-4134-82b1-fe2000884f87
SCIP notification number (Finland)	ee834f5e-1495-4120-af77-f1f1ebcbd050
SCIP notification number (France)	60072f7b-e2ea-4711-aafc-dcaabc46f5b8
SCIP notification number (Germany)	4deddb82-a69c-4371-9b20-741c126c81ae
SCIP notification number (Hungary)	1c4fea9d-2ce7-4f66-806e-a2328d34ca66
SCIP notification number (Italy)	9fa94739-d0cd-4cce-a17e-963d7d76c390
SCIP notification number (Netherlands)	81867df1-f609-4593-a335-1ab70111af0e
SCIP notification number (Poland)	89dc8a3b-9bed-43c7-a538-028dbc44b3f8
SCIP notification number (Romania)	ff9b49ea-d472-4020-a846-2c3c81a0cb79
SCIP notification number (Sweden)	d67e4e84-e691-4899-b5f3-364323bae2e7

Approvals / Certificates

General approvals

Approval	Standard	Certificate Name
KEMA/KEUR DEKRA Certification B.V.	EN 60947	71-107288

Declarations of conformity and manufacturer's declarations

Approval	Standard	Certificate Name
EU-Declaration of Conformity WAGO GmbH & Co. KG	-	-
UK-Declaration of Conformity WAGO GmbH & Co. KG	-	-

Approvals for marine applications

Approval	Standard	Certificate Name
ABS American Bureau of Shipping	-	24-0152298-PDA
DNV GL Det Norske Veritas, Germanischer Lloyd	-	TAE00001V2
PRS Polski Rejestr Statków	-	TE/1094/880590/23

Downloads

Environmental Product Compliance

Compliance Search

Environmental Product Compliance
281-915/281-410

Documentation

Bid Text

281-915/281-410	19.02.2019	xml 3.20 KB
281-915/281-410	27.04.2017	doc 24.50 KB

CAD/CAE-Data

CAD data

2D/3D Models
281-915/281-410

CAE data

EPLAN Data Portal
281-915/281-410

WSCAD Universe
281-915/281-410

ZUKEN Portal
281-915/281-410

Continued on next page

1 Compatible Products

1.1 Required Accessories

1.1.1 End plate

1.1.1.1 End plate



Item No.: 281-328
End and intermediate plate; 2.5 mm thick; gray



Item No.: 281-329
End and intermediate plate; 2.5 mm thick; orange



Item No.: 281-330
Separator plate; 2 mm thick; oversized; gray



Item No.: 281-331
Separator plate; 2 mm thick; oversized; orange

1.2 Optional Accessories

1.2.1 DIN-rail

1.2.1.1 Mounting accessories



Item No.: 210-196
Aluminum carrier rail; 35 x 8.2 mm; 1.6 mm thick; 2 m long; unslotted; similar to EN 60715; silver-colored



Item No.: 210-198
Copper carrier rail; 35 x 15 mm; 2.3 mm thick; 2 m long; unslotted; according to EN 60715; copper-colored



Item No.: 210-508
Steel carrier rail; 35 x 15 mm; 1.5 mm thick; 2 m long; slotted; galvanized; similar to EN 60715; silver-colored



Item No.: 210-197
Steel carrier rail; 35 x 15 mm; 1.5 mm thick; 2 m long; slotted; similar to EN 60715; silver-colored



Item No.: 210-506
Steel carrier rail; 35 x 15 mm; 1.5 mm thick; 2 m long; unslotted; galvanized; similar to EN 60715; silver-colored



Item No.: 210-114
Steel carrier rail; 35 x 15 mm; 1.5 mm thick; 2 m long; unslotted; similar to EN 60715; silver-colored



Item No.: 210-118
Steel carrier rail; 35 x 15 mm; 2.3 mm thick; 2 m long; unslotted; according to EN 60715; silver-colored



Item No.: 210-115
Steel carrier rail; 35 x 7.5 mm; 1 mm thick; 2 m long; slotted; according to EN 60715; "Hole width 18 mm; silver-colored



Item No.: 210-112
Steel carrier rail; 35 x 7.5 mm; 1 mm thick; 2 m long; slotted; according to EN 60715; "Hole width 25 mm; silver-colored



Item No.: 210-504
Steel carrier rail; 35 x 7.5 mm; 1 mm thick; 2 m long; slotted; galvanized; according to EN 60715; silver-colored



Item No.: 210-113
Steel carrier rail; 35 x 7.5 mm; 1 mm thick; 2 m long; unslotted; according to EN 60715; silver-colored



Item No.: 210-505
Steel carrier rail; 35 x 7.5 mm; 1 mm thick; 2 m long; unslotted; galvanized; according to EN 60715; silver-colored

1.2.2 Ferrule

1.2.2.1 Ferrule

Item No.: 216-241
Ferrule; Sleeve for 0.5 mm² / 20 AWG; insulated; electro-tin plated; electrolytic copper; gastight crimped; acc. to DIN 46228, Part 4/09.90; white

Item No.: 216-242
Ferrule; Sleeve for 0.75 mm² / 18 AWG; insulated; electro-tin plated; electrolytic copper; gastight crimped; acc. to DIN 46228, Part 4/09.90; gray

Item No.: 216-243
Ferrule; Sleeve for 1 mm² / AWG 18; insulated; electro-tin plated; electrolytic copper; gastight crimped; acc. to DIN 46228, Part 4/09.90; red



Item No.: 216-244
Ferrule; Sleeve for 1.5 mm² / AWG 16; insulated; electro-tin plated; electrolytic copper; gastight crimped; acc. to DIN 46228, Part 4/09.90; black



Item No.: 216-246
Ferrule; Sleeve for 2.5 mm² / AWG 14; insulated; electro-tin plated; electrolytic copper; gastight crimped; acc. to DIN 46228, Part 4/09.90; blue



Item No.: 216-106
Ferrule; Sleeve for 2.5 mm² / AWG 14; uninsulated; electro-tin plated; silver-colored

Continued on next page

1.2.3 Installation

1.2.3.1 Cover



Item No.: 709-153
Cover; Type 1; suitable for cover carrier, type 1; 1 m long; transparent

1.2.3.2 Cover carrier



Item No.: 709-167
Cover carrier; Type 1; incl. fixing/retaining screws and knurled nut; suitable for 279 to 282 and 880 Series rail-mounted terminal blocks; suitable for 264 Series miniature rail-mounted terminal blocks; suitable for 270 Series sensor and actuator terminal blocks; gray

1.2.3.3 Mounting accessories



Item No.: 209-106
Mounting carrier; for isolated mounting on DIN 35 rails; gray



Item No.: 249-116
Screwless end stop; 6 mm wide; for DIN-rail 35 x 15 and 35 x 7.5; gray

1.2.4 Insulation stop

1.2.4.1 Insulation stop



Item No.: 281-470
Insulation stop; 0.08 - 0.2 mm² "s" (0.14 mm² "f-st"); 5 pieces/strip; white



Item No.: 281-471
Insulation stop; 0.25 - 0.5 mm²; 5 pieces/strip; light gray



Item No.: 281-472
Insulation stop; 0.75 - 1.5 mm²; 5 pieces/strip; dark gray

1.2.5 Jumper

1.2.5.1 Jumper



Item No.: 281-490
Jumper; 10-way; insulated; gray



Item No.: 281-482
Jumper; 2-way; insulated; gray



Item No.: 281-492
Jumper; 2-way; insulated; gray



Item No.: 281-483
Jumper; 3-way; insulated; gray



Item No.: 281-485
Jumper; 5-way; insulated; gray



Item No.: 210-103
Wire commoning chain; 0.5 mm²; insulated; black



Item No.: 709-110
Wire commoning chain; 2.5 mm²; insulated; black



Item No.: 709-111
Wire commoning chain; 2.5 mm²; insulated; black



Item No.: 709-112
Wire commoning chain; 2.5 mm²; insulated; black



Item No.: 210-123
Wire commoning chain; insulated; blue

Continued on next page

1.2.6 Marking

1.2.6.1 Group marker carrier



Item No.: 249-105
Group marker carrier; gray

1.2.6.2 Marker



Item No.: 793-5501/000-006
WMB marking card; as card; for terminal block width 5 - 17.5 mm; stretchable 5 - 5.2 mm; plain; snap-on type; blue



Item No.: 793-5501/000-007
WMB marking card; as card; for terminal block width 5 - 17.5 mm; stretchable 5 - 5.2 mm; plain; snap-on type; gray



Item No.: 793-5501/000-023
WMB marking card; as card; for terminal block width 5 - 17.5 mm; stretchable 5 - 5.2 mm; plain; snap-on type; green



Item No.: 793-5501/000-017
WMB marking card; as card; for terminal block width 5 - 17.5 mm; stretchable 5 - 5.2 mm; plain; snap-on type; light green



Item No.: 793-5501/000-012
WMB marking card; as card; for terminal block width 5 - 17.5 mm; stretchable 5 - 5.2 mm; plain; snap-on type; orange



Item No.: 793-5501/000-005
WMB marking card; as card; for terminal block width 5 - 17.5 mm; stretchable 5 - 5.2 mm; plain; snap-on type; red



Item No.: 793-5501/000-024
WMB marking card; as card; for terminal block width 5 - 17.5 mm; stretchable 5 - 5.2 mm; plain; snap-on type; violet

Item No.: 793-5501
WMB marking card; as card; for terminal block width 5 - 17.5 mm; stretchable 5 - 5.2 mm; plain; snap-on type; white



Item No.: 793-5501/000-002
WMB marking card; as card; for terminal block width 5 - 17.5 mm; stretchable 5 - 5.2 mm; plain; snap-on type; yellow



Item No.: 793-501/000-006
WMB marking card; as card; not stretchable; plain; snap-on type; blue



Item No.: 793-501/000-007
WMB marking card; as card; not stretchable; plain; snap-on type; gray



Item No.: 793-501/000-023
WMB marking card; as card; not stretchable; plain; snap-on type; green



Item No.: 793-501/000-017
WMB marking card; as card; not stretchable; plain; snap-on type; light green



Item No.: 793-501/000-012
WMB marking card; as card; not stretchable; plain; snap-on type; orange



Item No.: 793-501/000-005
WMB marking card; as card; not stretchable; plain; snap-on type; red



Item No.: 793-501/000-024
WMB marking card; as card; not stretchable; plain; snap-on type; violet

Item No.: 793-501
WMB marking card; as card; not stretchable; plain; snap-on type; white



Item No.: 793-501/000-002
WMB marking card; as card; not stretchable; plain; snap-on type; yellow



Item No.: 2009-115/000-006
WMB-Inline; for Smart Printer; 1500 pieces on roll; stretchable 5 - 5.2 mm; plain; snap-on type; blue



Item No.: 2009-115/000-007
WMB-Inline; for Smart Printer; 1500 pieces on roll; stretchable 5 - 5.2 mm; plain; snap-on type; gray



Item No.: 2009-115/000-023
WMB-Inline; for Smart Printer; 1500 pieces on roll; stretchable 5 - 5.2 mm; plain; snap-on type; green



Item No.: 2009-115/000-017
WMB-Inline; for Smart Printer; 1500 pieces on roll; stretchable 5 - 5.2 mm; plain; snap-on type; light green



Item No.: 2009-115/000-012
WMB-Inline; for Smart Printer; 1500 pieces on roll; stretchable 5 - 5.2 mm; plain; snap-on type; orange



Item No.: 2009-115/000-024
WMB-Inline; for Smart Printer; 1500 pieces on roll; stretchable 5 - 5.2 mm; plain; snap-on type; violet



Item No.: 2009-115
WMB-Inline; for Smart Printer; 1500 pieces on roll; stretchable 5 - 5.2 mm; plain; snap-on type; white



Item No.: 2009-115/000-002
WMB-Inline; for Smart Printer; 1500 pieces on roll; stretchable 5 - 5.2 mm; plain; snap-on type; yellow

Continued on next page

1.2.7 Protective warning marker

1.2.7.1 Cover



Item No.: 281-415
Protective warning marker; for 5 terminal blocks; with high-voltage symbol, black; yellow

1.2.8 Tool

1.2.8.1 Operating tool



Item No.: 210-658
Operating tool; Blade: 3.5 x 0.5 mm; with a partially insulated shaft; angled; short; multicoloured



Item No.: 210-720
Operating tool; Blade: 3.5 x 0.5 mm; with a partially insulated shaft; multicoloured



Item No.: 210-657
Operating tool; Blade: 3.5 x 0.5 mm; with a partially insulated shaft; short; multicoloured

Installation Notes

Commoning



Commoning using comb-style jumper bars: Push comb-style jumper bars down until fully inserted.

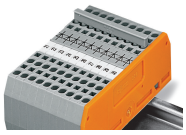

These diode terminal blocks have been specially developed for custom diode circuits, such as lamp test and collective fault signal circuits.



Open diode gates can be created using the following terminal blocks:
281-915/281-410 or 281-915/281-411