Data Sheet | Item Number: 282-133

2-conductor through terminal block; 6 mm²; with test option; for 4 mm Ø test plugs; same profile as 2-conductor disconnect terminal block; lateral marker slots; for DIN-rail 35 x 15 and 35 x 7.5; CAGE CLAMP®; 6,00 mm²; gray

https://www.wago.com/282-133

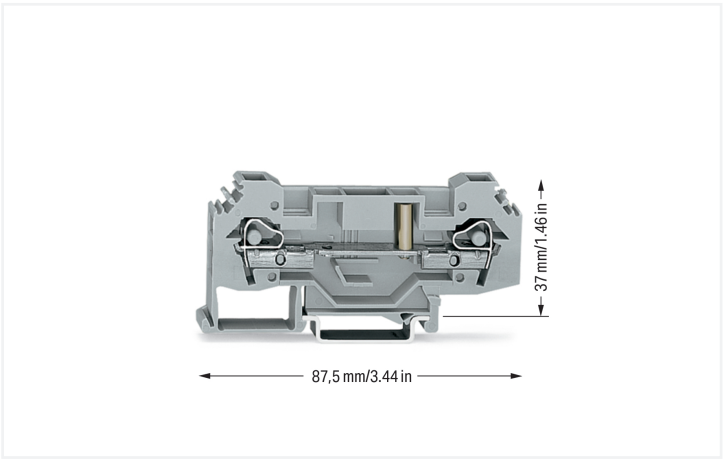

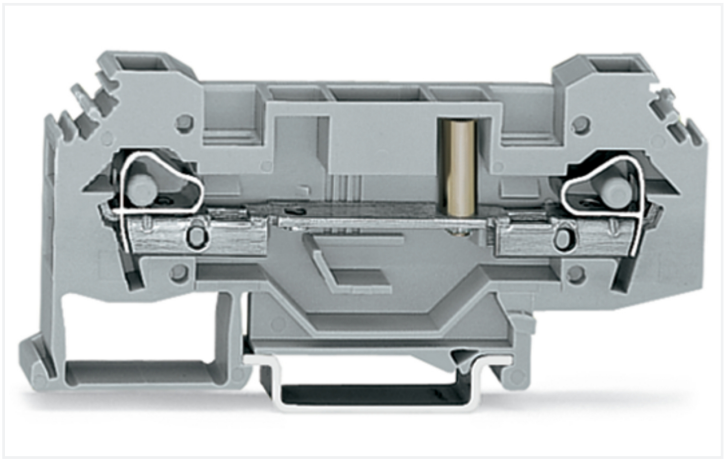

Color: gray

Through terminal block, 282 Series, operating tool

Our through terminal block (item number 282-133) makes connections quick and easy. Ensure that the strip lengths are between 12 and 13 mm when connecting conductors to this through terminal block. Featuring conductor terminals along with CAGE CLAMP®, this connector delivers reliable performance. Our highly-rated and maintenance-free CAGE CLAMP® connection makes it easy to connect all conductor types without having to prepare the conductor. For example, you don't need to crimp ferrules. This through terminal block is suitable for conductor cross sections ranging from 0.2 mm² to 6 mm².

Electrical data

Ratings per	IEC/EN 60947-7-1		
Overvoltage category	III	III	II
Pollution degree	3	2	2
Nominal voltage	400 V	-	-
Rated impulse withstand voltage	6 kV	-	-
Rated current	41 A	-	-

Power Loss	
Power loss, per pole (potential)	1.3112 W
Rated current I_N for power loss specification	41 A
Resistance value for specified, current-dependent power loss	0.00078 Ω

General information

Wiring direction	Side-entry wiring

Connection Data

Clamping units	2
Total number of potentials	1
Number of levels	1

Connection 1	
Connection technology	CAGE CLAMP®
Actuation type	Operating tool
Connectable conductor materials	Copper
Solid conductor	0.2 … 6 mm² / 24 … 10 AWG
Fine-stranded conductor	0.2 … 6 mm² / 24 … 10 AWG
Strip length	12 … 13 mm / 0.47 … 0.51 inches
Wiring direction	Side-entry wiring

Physical data

Width	8 mm / 0.315 inches
Height	87.5 mm / 3.445 inches
Depth from upper-edge of DIN-rail	37 mm / 1.457 inches

Mechanical data

Design	horizontal type
Mounting type	DIN-35 rail
Marking level	Side marking

Material data

Note (material data)	Information on material specifications can be found here
Color	gray
Material group	I
Insulation material (main housing)	Polyamide (PA66)
Flammability class per UL94	V0
Fire load	0.268 MJ
Weight	19 g

Environmental requirements

Processing temperature	-35 … +85 °C
Continuous operating temperature	-60 … +105 °C

Commercial data

Product Group	1 (Rail Mounted Terminal Blocks)
PU (SPU)	25 pcs
Packaging type	Box
Country of origin	CN
GTIN	4044918673365
Customs tariff number	85369010000

Product Classification

UNSPSC	39121410
eCl@ss 10.0	27-14-11-20
eCl@ss 9.0	27-14-11-20
ETIM 9.0	EC000897
ETIM 10.0	EC000897
ECCN	NO US CLASSIFICATION

Environmental Product Compliance

CAS-No.	7439-92-1
REACH Candidate List Substance	Lead
RoHS Compliance Status	Compliant,With Exemption
RoHS Exemption	6(c)
SCIP notification number (Austria)	d4af70d0-784a-4098-8670-39cbe18b2c3a
SCIP notification number (Belgium)	74b60eaf-2a7f-437b-a08c-1782c4bce77e
SCIP notification number (Bulgaria)	f920208e-22a9-43f6-9253-71aca1b3964e
SCIP notification number (Czech Republic)	a04a4a96-dd3e-48e2-a6b3-fe026283b299
SCIP notification number (Denmark)	7c6fb4c4-409c-4314-8a36-6cad041b2b78
SCIP notification number (Finland)	1f42ab15-df98-4070-bf63-5487460272f1
SCIP notification number (France)	2278e7a7-eed6-48bd-8162-6bfe665d9c4f

Continued on next page

Environmental Product Compliance

SCIP notification number (Germany)	f896ed2c-f8e5-4eda-bb2a-d3b5946a3988
SCIP notification number (Hungary)	98c2da3b-de9b-4465-aebc-8498c1478bca
SCIP notification number (Italy)	3c0fb749-b00c-404f-9ae5-3a7e9043dccc
SCIP notification number (Netherlands)	201a63a6-c5ff-4be6-88f0-7989f56572b8
SCIP notification number (Poland)	b356abfe-4c05-4d9f-9423-4d2d31a2ee6c
SCIP notification number (Romania)	2b23d83c-b73a-432f-83a3-1a0e41b032f6
SCIP notification number (Sweden)	d4f6b4a3-e3ea-4e13-8a83-8be055cc434f

Approvals / Certificates

General approvals

Approval	Standard	Certificate Name
CCA DEKRA Certification B.V.	EN 60947	NTR NL 8027
KEMA/KEUR DEKRA Certification B.V.	EN 60947	71-136074
UL Underwriters Laboratories Inc.	UL 1059	20190731-E45172

Declarations of conformity and manufacturer's declarations

Approval	Standard	Certificate Name
EU-Declaration of Conformity WAGO GmbH & Co. KG	-	-
UK-Declaration of Conformity WAGO GmbH & Co. KG	-	-

Approvals for marine applications

Approval	Standard	Certificate Name
ABS American Bureau of Shipping	EN 60947	24-0152298-PDA
BV Bureau Veritas S.A.	EN 60947	07436/G0 BV
DNV GL Det Norske Veritas, Germanischer Lloyd	-	TAE00001V2
PRS Polski Rejestr Statków	-	TE/1094/880590/23

Downloads

Environmental Product Compliance

Compliance Search

Environmental Product Compliance 282-133

Continued on next page

Documentation

Bid Text

282-133	19.02.2019	xml 3.20 KB
282-133	12.06.2017	doc 24.00 KB

CAD/CAE-Data

CAD data

2D/3D Models 282-133

CAE data

EPLAN Data Portal
282-133

WSCAD Universe
282-133

ZUKEN Portal 282-133

1 Compatible Products

1.1 Required Accessories

1.1.1 End plate

1.1.1.1 End plate



Item No.: 282-314
End and intermediate plate; 4 mm thick; gray



Item No.: 282-315
End and intermediate plate; 4 mm thick; orange

1.2 Optional Accessories

1.2.1 DIN-rail

1.2.1.1 Mounting accessories



Item No.: 210-196
Aluminum carrier rail; 35 x 8.2 mm; 1.6 mm thick; 2 m long; unslotted; similar to EN 60715; silver-colored



Item No.: 210-198
Copper carrier rail; 35 x 15 mm; 2.3 mm thick; 2 m long; unslotted; according to EN 60715; copper-colored



Item No.: 210-508
Steel carrier rail; 35 x 15 mm; 1.5 mm thick; 2 m long; slotted; galvanized; similar to EN 60715; silver-colored



Item No.: 210-197
Steel carrier rail; 35 x 15 mm; 1.5 mm thick; 2 m long; slotted; similar to EN 60715; silver-colored



Item No.: 210-506
Steel carrier rail; 35 x 15 mm; 1.5 mm thick; 2 m long; unslotted; galvanized; similar to EN 60715; silver-colored



Item No.: 210-114
Steel carrier rail; 35 x 15 mm; 1.5 mm thick; 2 m long; unslotted; similar to EN 60715; silver-colored



Item No.: 210-118
Steel carrier rail; 35 x 15 mm; 2.3 mm thick; 2 m long; unslotted; according to EN 60715; silver-colored



Item No.: 210-115
Steel carrier rail; 35 x 7.5 mm; 1 mm thick; 2 m long; slotted; according to EN 60715; "Hole width 18 mm; silver-colored



Item No.: 210-112
Steel carrier rail; 35 x 7.5 mm; 1 mm thick; 2 m long; slotted; according to EN 60715; "Hole width 25 mm; silver-colored



Item No.: 210-504
Steel carrier rail; 35 x 7.5 mm; 1 mm thick; 2 m long; slotted; galvanized; according to EN 60715; silver-colored



Item No.: 210-113
Steel carrier rail; 35 x 7.5 mm; 1 mm thick; 2 m long; unslotted; according to EN 60715; silver-colored



Item No.: 210-505
Steel carrier rail; 35 x 7.5 mm; 1 mm thick; 2 m long; unslotted; galvanized; according to EN 60715; silver-colored

Continued on next page

1.2.2 Ferrule

1.2.2.1 Ferrule

Item No.: 216-262
Ferrule; Sleeve for 0.75 mm² / 18 AWG; insulated; electro-tin plated; electrolytic copper; gastight crimped; acc. to DIN 46228, Part 4/09.90; gray

Item No.: 216-263
Ferrule; Sleeve for 1 mm² / AWG 18; insulated; electro-tin plated; electrolytic copper; gastight crimped; acc. to DIN 46228, Part 4/09.90; red



Item No.: 216-264
Ferrule; Sleeve for 1.5 mm² / AWG 16; insulated; electro-tin plated; electrolytic copper; gastight crimped; acc. to DIN 46228, Part 4/09.90; black



Item No.: 216-266
Ferrule; Sleeve for 2.5 mm² / AWG 14; insulated; electro-tin plated; electrolytic copper; gastight crimped; acc. to DIN 46228, Part 4/09.90; blue



Item No.: 216-267
Ferrule; Sleeve for 4 mm² / AWG 12; insulated; electro-tin plated; electrolytic copper; gastight crimped; acc. to DIN 46228, Part 4/09.90; gray

1.2.3 Installation

1.2.3.1 Cover



Item No.: 709-153
Cover; Type 1; suitable for cover carrier, type 1; 1 m long; transparent

1.2.3.2 Cover carrier



Item No.: 709-167
Cover carrier; Type 1; incl. fixing/retaining screws and knurled nut; suitable for 279 to 282 and 880 Series rail-mounted terminal blocks; suitable for 264 Series miniature rail-mounted terminal blocks; suitable for 270 Series sensor and actuator terminal blocks; gray

1.2.3.3 Mounting accessories



Item No.: 209-106
Mounting carrier; for isolated mounting on DIN 35 rails; gray



Item No.: 249-116
Screwless end stop; 6 mm wide; for DIN-rail 35 x 15 and 35 x 7.5; gray

1.2.4 Jumper

1.2.4.1 Jumper



Item No.: 282-402
Jumper; insulated; gray



Item No.: 282-409
Jumper; insulated; gray



Item No.: 282-424
Jumper; insulated; orange



Item No.: 282-422
Jumper; insulated; yellow-green



Item No.: 709-110
Wire commoning chain; 2.5 mm²; insulated; black



Item No.: 709-111
Wire commoning chain; 2.5 mm²; insulated; black



Item No.: 709-112
Wire commoning chain; 2.5 mm²; insulated; black

Continued on next page

1.2.5 Marking

1.2.5.1 Group marker carrier



Item No.: 209-143
Group marker carrier; gray



Item No.: 209-144
Group marker carrier; gray



Item No.: 249-105
Group marker carrier; gray

1.2.5.2 Marker



Item No.: 793-5501/000-006
WMB marking card; as card; for terminal block width 5 - 17.5 mm; stretchable 5 - 5.2 mm; plain; snap-on type; blue



Item No.: 793-5501/000-014
WMB marking card; as card; for terminal block width 5 - 17.5 mm; stretchable 5 - 5.2 mm; plain; snap-on type; brown



Item No.: 793-5501/000-007
WMB marking card; as card; for terminal block width 5 - 17.5 mm; stretchable 5 - 5.2 mm; plain; snap-on type; gray



Item No.: 793-5501/000-023
WMB marking card; as card; for terminal block width 5 - 17.5 mm; stretchable 5 - 5.2 mm; plain; snap-on type; green



Item No.: 793-5501/000-017
WMB marking card; as card; for terminal block width 5 - 17.5 mm; stretchable 5 - 5.2 mm; plain; snap-on type; light green



Item No.: 793-5501/000-012
WMB marking card; as card; for terminal block width 5 - 17.5 mm; stretchable 5 - 5.2 mm; plain; snap-on type; orange



Item No.: 793-5501/000-005
WMB marking card; as card; for terminal block width 5 - 17.5 mm; stretchable 5 - 5.2 mm; plain; snap-on type; red



Item No.: 793-5501/000-024
WMB marking card; as card; for terminal block width 5 - 17.5 mm; stretchable 5 - 5.2 mm; plain; snap-on type; violet

Item No.: 793-5501
WMB marking card; as card; for terminal block width 5 - 17.5 mm; stretchable 5 - 5.2 mm; plain; snap-on type; white



Item No.: 793-5501/000-002
WMB marking card; as card; for terminal block width 5 - 17.5 mm; stretchable 5 - 5.2 mm; plain; snap-on type; yellow



Item No.: 793-501/000-006
WMB marking card; as card; not stretchable; plain; snap-on type; blue



Item No.: 793-501/000-007
WMB marking card; as card; not stretchable; plain; snap-on type; gray



Item No.: 793-501/000-023
WMB marking card; as card; not stretchable; plain; snap-on type; green



Item No.: 793-501/000-017
WMB marking card; as card; not stretchable; plain; snap-on type; light green



Item No.: 793-501/000-012
WMB marking card; as card; not stretchable; plain; snap-on type; orange



Item No.: 793-501/000-005
WMB marking card; as card; not stretchable; plain; snap-on type; red



Item No.: 793-501/000-024
WMB marking card; as card; not stretchable; plain; snap-on type; violet

Item No.: 793-501
WMB marking card; as card; not stretchable; plain; snap-on type; white



Item No.: 793-501/000-002
WMB marking card; as card; not stretchable; plain; snap-on type; yellow



Item No.: 2009-115/000-006
WMB-Inline; for Smart Printer; 1500 pieces on roll; stretchable 5 - 5.2 mm; plain; snap-on type; blue



Item No.: 2009-115/000-007
WMB-Inline; for Smart Printer; 1500 pieces on roll; stretchable 5 - 5.2 mm; plain; snap-on type; gray



Item No.: 2009-115/000-023
WMB-Inline; for Smart Printer; 1500 pieces on roll; stretchable 5 - 5.2 mm; plain; snap-on type; green



Item No.: 2009-115/000-017
WMB-Inline; for Smart Printer; 1500 pieces on roll; stretchable 5 - 5.2 mm; plain; snap-on type; light green



Item No.: 2009-115/000-012
WMB-Inline; for Smart Printer; 1500 pieces on roll; stretchable 5 - 5.2 mm; plain; snap-on type; orange



Item No.: 2009-115/000-024
WMB-Inline; for Smart Printer; 1500 pieces on roll; stretchable 5 - 5.2 mm; plain; snap-on type; violet



Item No.: 2009-115
WMB-Inline; for Smart Printer; 1500 pieces on roll; stretchable 5 - 5.2 mm; plain; snap-on type; white



Item No.: 2009-115/000-002
WMB-Inline; for Smart Printer; 1500 pieces on roll; stretchable 5 - 5.2 mm; plain; snap-on type; yellow

Continued on next page

1.2.6 Protective warning marker

1.2.6.1 Cover



Item No.: 282-405
Protective warning marker; for 5 terminal blocks; with high-voltage symbol, black; yellow

1.2.7 Test and measurement

1.2.7.1 Testing accessories



Item No.: 709-311
B-type spacer module; modular; e.g., for bridging commoned terminal blocks; gray



Item No.: 709-310
B-type test plug module; modular; suitable for all WAGO 282 Series rail-mounted terminal blocks with jumper slots; 6,00 mm²; gray



Item No.: 209-170
Test plug adapter; 8.3 mm wide; for 4 mm Ø test plugs; suitable for 1.5 mm² - 10 mm² tbs; gray

1.2.8 Tool

1.2.8.1 Operating tool



Item No.: 210-721
Operating tool; Blade: 5.5 x 0.8 mm; with a partially insulated shaft; multicoloured

Installation Notes

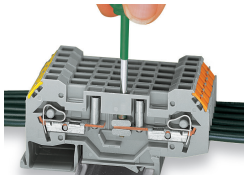

Shifting the disconnect slide link.