Data Sheet | Item Number: 282-139

Ground conductor disconnect terminal block; 230 V; 6 mm²; CAGE CLAMP®; 6,00 mm²; gray

https://www.wago.com/282-139

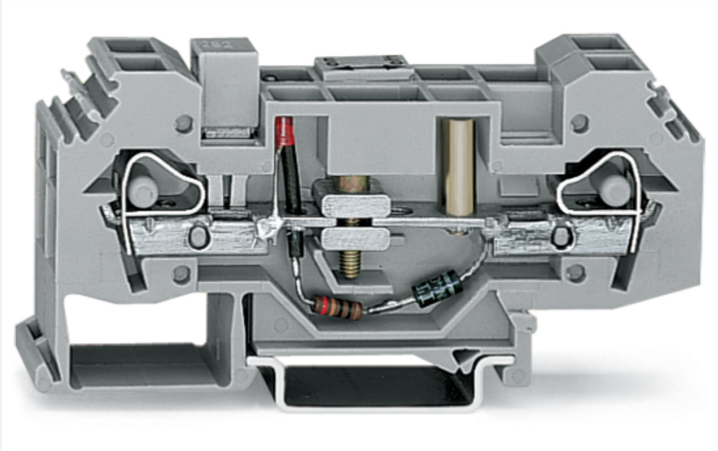

Color: gray

Similar to illustration

Disconnect terminal block, 282 Series, gray

Quick and easy connections are guaranteed with this disconnect terminal block (item number 282-139). Conductors should only be connected to this disconnect terminal block if their strip length is between 12 and 13 mm . Featuring conductor terminals along with CAGE CLAMP®, this connector delivers reliable performance. Our highly-rated and maintenance-free CAGE CLAMP® connection makes it easy to connect all conductor types without having to prepare the conductor. For example, you don't need to crimp ferrules. This disconnect terminal block is suitable for conductor cross sections ranging from 0.2 mm² to 6 mm².

Electrical data

Ratings per IEC/EN

Operation status indicator	230 V

Power Loss

Power loss, per pole (potential)	1.3112 W
Rated current I_N for power loss specification	41 A
Resistance value for specified, current-dependent power loss	0.00078 Ω

General information

Wiring direction	Side-entry wiring

Connection Data

Clamping units	4
Total number of potentials	2
Number of levels	1

Connection 1

Connection technology	CAGE CLAMP®
Actuation type	Operating tool
Connectable conductor materials	Copper
Solid conductor	0.2 … 6 mm² / 24 … 10 AWG
Fine-stranded conductor	0.2 … 6 mm² / 24 … 10 AWG
Strip length	12 … 13 mm / 0.47 … 0.51 inches
Wiring direction	Side-entry wiring

Continued on next page

Physical data

Width	16 mm / 0.63 inches
Height	87.5 mm / 3.445 inches
Depth from upper-edge of DIN-rail	38.5 mm / 1.516 inches

Mechanical data

Design	horizontal type
Mounting type	DIN-35 rail
Marking level	Side marking

Material data

Note (material data)	Information on material specifications can be found here
Color	gray
Material group	I
Insulation material (main housing)	Polyamide (PA66)
Flammability class per UL94	V0
Fire load	0.587 MJ
Weight	45 g

Environmental requirements

Processing temperature	-35 … +85 °C
Continuous operating temperature	-60 … +105 °C

Commercial data

Product Group	1 (Rail Mounted Terminal Blocks)
PU (SPU)	12 (1) pcs
Packaging type	Box
Country of origin	DE
GTIN	4045454448509
Customs tariff number	85365080000

Product Classification

UNSPSC	39121410
eCl@ss 10.0	27-14-11-26
eCl@ss 9.0	27-14-11-26
ETIM 9.0	EC000902
ETIM 10.0	EC000902
ECCN	NO US CLASSIFICATION

Environmental Product Compliance

CAS-No.	7439-92-1
REACH Candidate List Substance	Lead
RoHS Compliance Status	Compliant,With Exemption
RoHS Exemption	6(c)
SCIP notification number (Austria)	eff037dc-62ad-40e3-b106-cc172fb54aef
SCIP notification number (Belgium)	c3eac3c3-240e-4df2-9a75-ac883afe5ba4
SCIP notification number (Bulgaria)	3d9b0ca7-f1f4-4151-a4b2-b32b85cb0527
SCIP notification number (Czech Republic)	45168392-7b32-4702-a506-224dbc650eea
SCIP notification number (Denmark)	be5111ad-5eb6-40a9-8fb5-a9bef96a34f7
SCIP notification number (Finland)	e0354396-1eb8-4eb1-8ea8-07c37fc34019
SCIP notification number (France)	e4fce981-123e-45b1-91e5-a5a765485869

Continued on next page

Environmental Product Compliance

SCIP notification number (Germany)	25e4a638-5b09-4970-962d-5d0cc921d590
SCIP notification number (Hungary)	185450dc-047b-4c65-807e-aaecd4774475
SCIP notification number (Italy)	8353d8c4-aa78-4145-b9e5-ddee1c12af1b
SCIP notification number (Netherlands)	7c892d24-ad57-429f-8456-532208351143
SCIP notification number (Poland)	9dfc706a-0049-4d32-b099-825b1e88da83
SCIP notification number (Romania)	bb8ea7dc-ae1c-4058-a5a1-3ce7e42583a3
SCIP notification number (Sweden)	e569a860-d3bb-457f-a70d-6c7805e8a30b

Approvals / Certificates

General approvals

Approval	Standard	Certificate Name
CCA DEKRA Certification B.V.	EN 60947	NTR NL 8027
KEMA/KEUR DEKRA Certification B.V.	EN 60947	71-136074

Declarations of conformity and manufacturer's declarations

Approval	Standard	Certificate Name
EU-Declaration of Conformity WAGO GmbH & Co. KG	-	-
UK-Declaration of Conformity WAGO GmbH & Co. KG	-	-

Approvals for marine applications

Approval	Standard	Certificate Name
ABS American Bureau of Shipping	EN 60947	24-0152298-PDA
BV Bureau Veritas S.A.	EN 60947	07436/G0 BV
DNV GL Det Norske Veritas, Germanischer Lloyd	-	TAE00001V2
PRS Polski Rejestr Statków	-	TE/1094/880590/23

Downloads

Environmental Product Compliance

Compliance Search

Environmental Product Compliance 282-139

Continued on next page

Documentation

Bid Text

282-139	19.02.2019	xml 2.96 KB
282-139	12.06.2017	doc 24.00 KB

CAD/CAE-Data

CAD data

2D/3D Models 282-139

CAE data

EPLAN Data Portal 282-139

WSCAD Universe 282-139

ZUKEN Portal 282-139

1 Compatible Products

1.1 Required Accessories

1.1.1 End plate

1.1.1.1 End plate



Item No.: 282-314
End and intermediate plate; 4 mm thick; gray



Item No.: 282-315
End and intermediate plate; 4 mm thick; orange

1.2 Optional Accessories

1.2.1 Coding

1.2.1.1 Locking system



Item No.: 282-137
Lock-out; prevents reclosing of slide link; snap-in type; orange

1.2.2 DIN-rail

1.2.2.1 Mounting accessories



Item No.: 210-196
Aluminum carrier rail; 35 x 8.2 mm; 1.6 mm thick; 2 m long; unslotted; similar to EN 60715; silver-colored



Item No.: 210-198
Copper carrier rail; 35 x 15 mm; 2.3 mm thick; 2 m long; unslotted; according to EN 60715; copper-colored



Item No.: 210-508
Steel carrier rail; 35 x 15 mm; 1.5 mm thick; 2 m long; slotted; galvanized; similar to EN 60715; silver-colored



Item No.: 210-197
Steel carrier rail; 35 x 15 mm; 1.5 mm thick; 2 m long; slotted; similar to EN 60715; silver-colored

Continued on next page

1.2.2.1 Mounting accessories



Item No.: 210-506
Steel carrier rail; 35 x 15 mm; 1.5 mm thick; 2 m long; unslotted; galvanized; similar to EN 60715; silver-colored



Item No.: 210-114
Steel carrier rail; 35 x 15 mm; 1.5 mm thick; 2 m long; unslotted; similar to EN 60715; silver-colored



Item No.: 210-118
Steel carrier rail; 35 x 15 mm; 2.3 mm thick; 2 m long; unslotted; according to EN 60715; silver-colored



Item No.: 210-115
Steel carrier rail; 35 x 7.5 mm; 1 mm thick; 2 m long; slotted; according to EN 60715; "Hole width 18 mm; silver-colored



Item No.: 210-112
Steel carrier rail; 35 x 7.5 mm; 1 mm thick; 2 m long; slotted; according to EN 60715; "Hole width 25 mm; silver-colored



Item No.: 210-504
Steel carrier rail; 35 x 7.5 mm; 1 mm thick; 2 m long; slotted; galvanized; according to EN 60715; silver-colored



Item No.: 210-113
Steel carrier rail; 35 x 7.5 mm; 1 mm thick; 2 m long; unslotted; according to EN 60715; silver-colored



Item No.: 210-505
Steel carrier rail; 35 x 7.5 mm; 1 mm thick; 2 m long; unslotted; galvanized; according to EN 60715; silver-colored

1.2.3 Ferrule

1.2.3.1 Ferrule

Item No.: 216-262
Ferrule; Sleeve for 0.75 mm² / 18 AWG; insulated; electro-tin plated; electrolytic copper; gastight crimped; acc. to DIN 46228, Part 4/09.90; gray

Item No.: 216-263
Ferrule; Sleeve for 1 mm² / AWG 18; insulated; electro-tin plated; electrolytic copper; gastight crimped; acc. to DIN 46228, Part 4/09.90; red



Item No.: 216-264
Ferrule; Sleeve for 1.5 mm² / AWG 16; insulated; electro-tin plated; electrolytic copper; gastight crimped; acc. to DIN 46228, Part 4/09.90; black



Item No.: 216-266
Ferrule; Sleeve for 2.5 mm² / AWG 14; insulated; electro-tin plated; electrolytic copper; gastight crimped; acc. to DIN 46228, Part 4/09.90; blue



Item No.: 216-267
Ferrule; Sleeve for 4 mm² / AWG 12; insulated; electro-tin plated; electrolytic copper; gastight crimped; acc. to DIN 46228, Part 4/09.90; gray

1.2.4 Installation

1.2.4.1 Cover



Item No.: 709-153
Cover; Type 1; suitable for cover carrier, type 1; 1 m long; transparent

1.2.4.2 Cover carrier



Item No.: 709-167
Cover carrier; Type 1; incl. fixing/retaining screws and knurled nut; suitable for 279 to 282 and 880 Series rail-mounted terminal blocks; suitable for 264 Series miniature rail-mounted terminal blocks; suitable for 270 Series sensor and actuator terminal blocks; gray

Continued on next page

1.2.4.3 Mounting accessories



Item No.: 209-106
Mounting carrier; for isolated mounting on DIN 35 rails; gray



Item No.: 249-116
Screwless end stop; 6 mm wide; for DIN-rail 35 x 15 and 35 x 7.5; gray

1.2.5 Jumper

1.2.5.1 Jumper



Item No.: 282-402
Jumper; insulated; gray

Item No.: 282-424
Jumper; insulated; orange



Item No.: 282-422
Jumper; insulated; yellow-green



Item No.: 709-110
Wire commoning chain; 2.5 mm²; insulated; black



Item No.: 709-111
Wire commoning chain; 2.5 mm²; insulated; black



Item No.: 709-112
Wire commoning chain; 2.5 mm²; insulated; black

1.2.6 Marking

1.2.6.1 Group marker carrier



Item No.: 209-143
Group marker carrier; gray



Item No.: 209-144
Group marker carrier; gray



Item No.: 249-105
Group marker carrier; gray

1.2.6.2 Marker



Item No.: 793-5501/000-006
WMB marking card; as card; for terminal block width 5 - 17.5 mm; stretchable 5 - 5.2 mm; plain; snap-on type; blue



Item No.: 793-5501/000-014
WMB marking card; as card; for terminal block width 5 - 17.5 mm; stretchable 5 - 5.2 mm; plain; snap-on type; brown



Item No.: 793-5501/000-007
WMB marking card; as card; for terminal block width 5 - 17.5 mm; stretchable 5 - 5.2 mm; plain; snap-on type; gray



Item No.: 793-5501/000-023
WMB marking card; as card; for terminal block width 5 - 17.5 mm; stretchable 5 - 5.2 mm; plain; snap-on type; green



Item No.: 793-5501/000-017
WMB marking card; as card; for terminal block width 5 - 17.5 mm; stretchable 5 - 5.2 mm; plain; snap-on type; light green



Item No.: 793-5501/000-012
WMB marking card; as card; for terminal block width 5 - 17.5 mm; stretchable 5 - 5.2 mm; plain; snap-on type; orange



Item No.: 793-5501/000-005
WMB marking card; as card; for terminal block width 5 - 17.5 mm; stretchable 5 - 5.2 mm; plain; snap-on type; red



Item No.: 793-5501/000-024
WMB marking card; as card; for terminal block width 5 - 17.5 mm; stretchable 5 - 5.2 mm; plain; snap-on type; violet

Item No.: 793-5501
WMB marking card; as card; for terminal block width 5 - 17.5 mm; stretchable 5 - 5.2 mm; plain; snap-on type; white



Item No.: 793-5501/000-002
WMB marking card; as card; for terminal block width 5 - 17.5 mm; stretchable 5 - 5.2 mm; plain; snap-on type; yellow



Item No.: 793-501/000-006
WMB marking card; as card; not stretchable; plain; snap-on type; blue



Item No.: 793-501/000-007
WMB marking card; as card; not stretchable; plain; snap-on type; gray



Item No.: 793-501/000-023
WMB marking card; as card; not stretchable; plain; snap-on type; green



Item No.: 793-501/000-017
WMB marking card; as card; not stretchable; plain; snap-on type; light green



Item No.: 793-501/000-012
WMB marking card; as card; not stretchable; plain; snap-on type; orange



Item No.: 793-501/000-005
WMB marking card; as card; not stretchable; plain; snap-on type; red



Item No.: 793-501/000-024
WMB marking card; as card; not stretchable; plain; snap-on type; violet

Item No.: 793-501
WMB marking card; as card; not stretchable; plain; snap-on type; white



Item No.: 793-501/000-002
WMB marking card; as card; not stretchable; plain; snap-on type; yellow



Item No.: 2009-115/000-006
WMB-Inline; for Smart Printer; 1500 pieces on roll; stretchable 5 - 5.2 mm; plain; snap-on type; blue

Continued on next page

1.2.6.2 Marker



Item No.: 2009-115/000-007
WMB-Inline; for Smart Printer; 1500 pieces on roll; stretchable 5 - 5.2 mm; plain; snap-on type; gray



Item No.: 2009-115/000-023
WMB-Inline; for Smart Printer; 1500 pieces on roll; stretchable 5 - 5.2 mm; plain; snap-on type; green



Item No.: 2009-115/000-017
WMB-Inline; for Smart Printer; 1500 pieces on roll; stretchable 5 - 5.2 mm; plain; snap-on type; light green



Item No.: 2009-115/000-012
WMB-Inline; for Smart Printer; 1500 pieces on roll; stretchable 5 - 5.2 mm; plain; snap-on type; orange



Item No.: 2009-115/000-024
WMB-Inline; for Smart Printer; 1500 pieces on roll; stretchable 5 - 5.2 mm; plain; snap-on type; violet



Item No.: 2009-115
WMB-Inline; for Smart Printer; 1500 pieces on roll; stretchable 5 - 5.2 mm; plain; snap-on type; white



Item No.: 2009-115/000-002
WMB-Inline; for Smart Printer; 1500 pieces on roll; stretchable 5 - 5.2 mm; plain; snap-on type; yellow

1.2.7 Protective warning marker

1.2.7.1 Cover



Item No.: 282-405
Protective warning marker; for 5 terminal blocks; with high-voltage symbol, black; yellow

1.2.8 Tool

1.2.8.1 Operating tool



Item No.: 210-721
Operating tool; Blade: 5.5 x 0.8 mm; with a partially insulated shaft; multicoloured

Installation Notes

Continued on next page

Testing

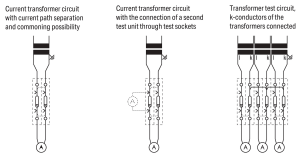

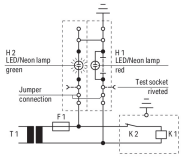

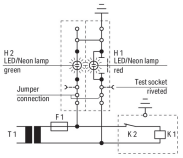

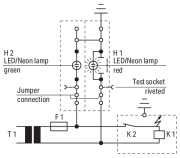

IEC 60204/DIN VDE 0113 “Safety of machinery – Electrical equipment of machines – Part 1: General requirements,” Section 9.4.3.1:

Ground faults on control circuits must not cause unintentional starting, hazardous movements, or prevent stopping of the machine.

In order to fulfill this requirement, a connection to the protective bonding circuit must be provided in accordance with Section 8.2 and the devices must be connected as described in Section 9.1.4. Control circuits fed from a transformer and not connected to the protective bonding circuit must be provided with an insulation monitoring device (e.g., residual current device), which either indicates a ground fault or interrupts the circuit automatically after a ground fault. In the case of electronic circuits, the connection of one side of the control circuit to the protective bonding circuit in accordance with Section 9.1.4 can prevent unintentional operation. When this does not help, or if due to other reasons that electronic circuits cannot be connected to the protective bonding circuit, other measures must be taken to achieve the same level of safety.

Multipole control switches that interrupt all live conductors must be used where the control circuit is directly connected between the phase conductors of the supply or between a phase conductor and a neutral conductor, which is either not grounded or grounded through a high impedance. This is required for starting or stopping machine functions, which can cause a hazardous situation including: damaging the machine or halting work in progress in the event of unintentional starting or failure to stop.

Operation
Slide link closed, auxiliary circuit grounded, green LED/neon lamp illuminates.

Test condition – no ground fault
Slide link open, auxiliary circuit not grounded.

Test condition – ground fault
Slide link open, auxiliary circuit not grounded, red LED/neon lamp illuminates.