Data Sheet | Item Number: 285-607/999-950

2-conductor ground terminal block; 25 mm²; suitable for Ex e II applications; lateral marker slots; only for DIN 35 x 15 rail; CAGE CLAMP®; 25,00 mm²; green-yellow

https://www.wago.com/285-607/999-950

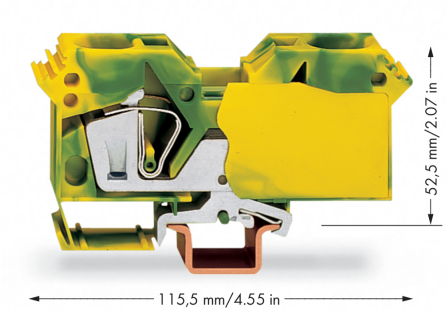

Color: green-yellow

Similar to illustration

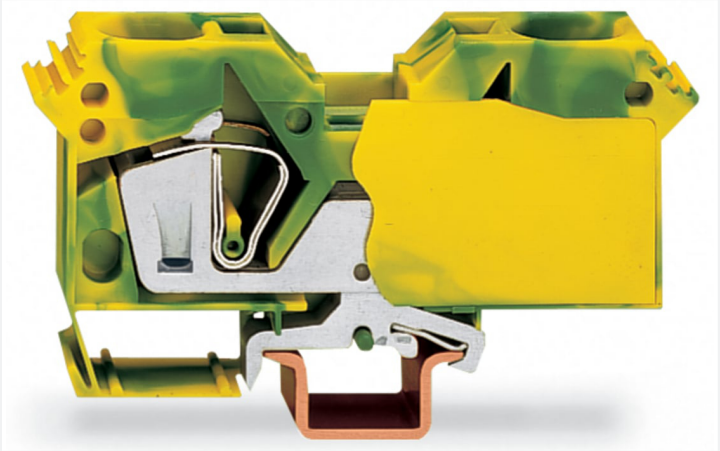

Similar to illustration

Ground terminal block, 285 Series, green-yellow

Our ground terminal block (item number 285-607/999-950) is the ideal way to connect conductors quickly and easily. Strip lengths must be 23 mm when connecting conductors to this ground terminal block. Our ground terminal blocks create a direct connection between the mounting rail and the electrical conductors thanks to an integrated mounting foot. This connection ensures both electrical and mechanical stability between the conductors and the mounting adapter. This product features conductor terminals and utilizes CAGE CLAMP®. Our CAGE CLAMP® connection offers a proven and maintenance-free way to connect all types of conductors. You do not need to prepare the conductor in any way, such as crimping ferrules. This ground terminal block is suitable for conductor cross sections ranging from 6 mm² to 25 mm².

An operating tool is used to operate this through rail-mount terminal block.

Electrical data

Ratings per	IEC/EN 60947-7-2		
Overvoltage category	III	III	II
Pollution degree	3	2	2
Nominal voltage	-	-	-
Rated impulse withstand voltage	-	-	-
Rated current	-	-	-

General information

Wiring direction	Front-entry wiring

Ex information

Reference to hazardous areas	See “Downloads – Documentation – Additional Information: Technical Section; Technical Explications”

Connection Data

Clamping units	2
Total number of potentials	1
Number of levels	1

Connection 1

Connection technology	CAGE CLAMP®
Actuation type	Operating tool
Connectable conductor materials	Copper
Solid conductor	6 … 25 mm² / 8 … 2 AWG
Strip length	23 mm / 0.91 inches
Wiring direction	Front-entry wiring

Physical data

Width	16 mm / 0.63 inches
Height	115.5 mm / 4.547 inches
Depth from upper-edge of DIN-rail	52.5 mm / 2.067 inches

Mechanical data

Design	horizontal type
Mounting type	DIN-35 rail
Mounting (note)	only suitable for DIN 35 x 15 rail
Marking level	Side marking

Material data

Note (material data)	Information on material specifications can be found here
Color	green-yellow
Material group	I
Insulation material (main housing)	Polyamide (PA66)
Flammability class per UL94	V0
Fire load	1.026 MJ
Weight	152.3 g

Environmental requirements

Processing temperature	-35 … +85 °C
Continuous operating temperature	-60 … +105 °C

Commercial data

PU (SPU)	15 pcs
Packaging type	Box
Country of origin	DE
GTIN	4066966253016
Customs tariff number	85369010000

Continued on next page

Product Classification

UNSPSC	39121410
eCl@ss 10.0	27-14-11-41
eCl@ss 9.0	27-14-11-41
ETIM 9.0	EC000901
ETIM 10.0	EC000901
ECCN	NO US CLASSIFICATION

Environmental Product Compliance

CAS-No.	7439-92-1
REACH Candidate List Substance	Lead
RoHS Compliance Status	Compliant,No Exemption
SCIP notification number (Austria)	edb447b5-ec5f-4505-965a-c6759a63d3b7
SCIP notification number (Belgium)	0827f21d-ec9d-4e32-b0c9-56777fce2e87
SCIP notification number (Bulgaria)	3671dbc9-706f-4cfa-9e6c-9d0d68db8342
SCIP notification number (Czech Republic)	0dcaf0ae-cb98-4398-b013-5abf8d47dbcb
SCIP notification number (Denmark)	498fb3d5-1784-454d-bb9e-860a863109ce
SCIP notification number (Finland)	e49e10c9-2f0a-4fce-8b37-ddb1bb06613a
SCIP notification number (France)	de26ffe7-7f5e-4e34-9f66-80483a4c699c
SCIP notification number (Germany)	0ab66977-cc1a-45c3-b6f2-ff58a8c66a61
SCIP notification number (Hungary)	c4a06cd4-d648-49e1-aaf7-407bf692b784
SCIP notification number (Italy)	6c7ff8bd-0cd3-43e9-8c2e-a5d722c4e057
SCIP notification number (Netherlands)	2c5bae1e-d3a0-4e4c-bdb3-aa4c192f95b3
SCIP notification number (Poland)	51e11204-8d53-479b-be88-851b69a85467
SCIP notification number (Romania)	22c79ce4-bcc6-4276-b3ac-981387fda29b
SCIP notification number (Sweden)	8c919f53-8bb2-4843-9589-9e2016f61ec9

Approvals / Certificates

General approvals

Approval	Standard	Certificate Name
CCA DEKRA Certification B.V.	EN 60947	NTR NL-7707
CSA CSA Group	C22.2	1151144
KEMA/KEUR DEKRA Certification B.V.	EN 60947	71-105562

Declarations of conformity and manufacturer's declarations

Approval	Standard	Certificate Name
ATEX-Attestation of Conformity WAGO GmbH & Co. KG	-	-
EU-Declaration of Conformity WAGO GmbH & Co. KG	-	-
UK-Declaration of Conformity WAGO GmbH & Co. KG	-	-

Approvals for marine applications

Approval	Standard	Certificate Name
ABS American Bureau of Shipping	EN 60947	24-0152298-PDA
BV Bureau Veritas S.A.	EN 60947	07436/G0 BV
DNV GL Det Norske Veritas, Germanischer Lloyd	-	TAE00001V2
LR Lloyds Register	EN 60947	LR23325966TA

Approvals for marine applications

PRS Polski Rejestr Statków	-	TE/1094/880590/23

Continued on next page

Approvals for hazardous areas

Approval	Standard	Certificate Name
ATEX Physikalisch Technische Bundesanstalt	EN 60079-0	PTB 98 ATEX 3134 U (II 2 G Ex eb IIC Gb or I M 2 Ex eb I Mb)
CCC CNEX	GB/T 3836.3	2020312313000177 (Ex eb IIC Gb, Ex eb I Mb)
IECEx Physikalisch Technische Bundesanstalt	IEC 60079-0	IECEx PTB 16.0001U (Ex eb IIC Gb or Ex eb I Mb)

Downloads

Environmental Product Compliance

Compliance Search

Environmental Product Compliance
285-607/999-950

CAD/CAE-Data

CAD data

2D/3D Models
285-607/999-950

CAE data

EPLAN Data Portal
285-607/999-950

WSCAD Universe
285-607/999-950

ZUKEN Portal
285-607/999-950

1 Compatible Products

1.1 Required Accessories

1.1.1 End plate

1.1.1.1 End plate



Item No.: 285-338
Separator plate; 2 mm thick; oversized; light gray

Continued on next page

1.2 Optional Accessories

1.2.1 DIN-rail

1.2.1.1 Mounting accessories



Item No.: 210-198
Copper carrier rail; 35 x 15 mm; 2.3 mm thick; 2 m long; unslotted; according to EN 60715; copper-colored



Item No.: 210-118
Steel carrier rail; 35 x 15 mm; 2.3 mm thick; 2 m long; unslotted; according to EN 60715; silver-colored

1.2.2 Installation

1.2.2.1 Cover



Item No.: 709-154
Cover; Type 2; suitable for cover carrier, type 2; 1 m long; transparent

1.2.2.2 Cover carrier



Item No.: 709-168
Cover carrier; Type 2; incl. fixing/retaining screws and knurled nut; suitable for 283 to 285 Series rail-mounted terminal blocks; suitable for 279 to 281 Series double- and triple-deck terminal blocks; suitable for 780 to 785, 775, 776 and 777 Series TOPJOB® rail-mounted terminal blocks; suitable for 280 Series sensor and actuator terminal blocks; suitable for 282 Series disconnect/ test terminal blocks for transformer circuits; gray

1.2.2.3 Mounting accessories



Item No.: 209-106
Mounting carrier; for isolated mounting on DIN 35 rails; gray



Item No.: 249-116
Screwless end stop; 6 mm wide; for DIN-rail 35 x 15 and 35 x 7.5; gray

1.2.3 Marking

1.2.3.1 Group marker carrier



Item No.: 249-105
Group marker carrier; gray

1.2.3.2 Marker



Item No.: 793-5501/000-006
WMB marking card; as card; for terminal block width 5 - 17.5 mm; stretchable 5 - 5.2 mm; plain; snap-on type; blue



Item No.: 793-5501/000-007
WMB marking card; as card; for terminal block width 5 - 17.5 mm; stretchable 5 - 5.2 mm; plain; snap-on type; gray



Item No.: 793-5501/000-023
WMB marking card; as card; for terminal block width 5 - 17.5 mm; stretchable 5 - 5.2 mm; plain; snap-on type; green



Item No.: 793-5501/000-017
WMB marking card; as card; for terminal block width 5 - 17.5 mm; stretchable 5 - 5.2 mm; plain; snap-on type; light green



Item No.: 793-5501/000-012
WMB marking card; as card; for terminal block width 5 - 17.5 mm; stretchable 5 - 5.2 mm; plain; snap-on type; orange



Item No.: 793-5501/000-005
WMB marking card; as card; for terminal block width 5 - 17.5 mm; stretchable 5 - 5.2 mm; plain; snap-on type; red



Item No.: 793-5501/000-024
WMB marking card; as card; for terminal block width 5 - 17.5 mm; stretchable 5 - 5.2 mm; plain; snap-on type; violet

Item No.: 793-5501
WMB marking card; as card; for terminal block width 5 - 17.5 mm; stretchable 5 - 5.2 mm; plain; snap-on type; white



Item No.: 793-5501/000-002
WMB marking card; as card; for terminal block width 5 - 17.5 mm; stretchable 5 - 5.2 mm; plain; snap-on type; yellow



Item No.: 793-501/000-006
WMB marking card; as card; not stretchable; plain; snap-on type; blue



Item No.: 793-501/000-007
WMB marking card; as card; not stretchable; plain; snap-on type; gray



Item No.: 793-501/000-023
WMB marking card; as card; not stretchable; plain; snap-on type; green



Item No.: 793-501/000-017
WMB marking card; as card; not stretchable; plain; snap-on type; light green



Item No.: 793-501/000-012
WMB marking card; as card; not stretchable; plain; snap-on type; orange



Item No.: 793-501/000-005
WMB marking card; as card; not stretchable; plain; snap-on type; red



Item No.: 793-501/000-024
WMB marking card; as card; not stretchable; plain; snap-on type; violet

Item No.: 793-501
WMB marking card; as card; not stretchable; plain; snap-on type; white



Item No.: 793-501/000-002
WMB marking card; as card; not stretchable; plain; snap-on type; yellow



Item No.: 2009-115/000-006
WMB-Inline; for Smart Printer; 1500 pieces on roll; stretchable 5 - 5.2 mm; plain; snap-on type; blue



Item No.: 2009-115/000-007
WMB-Inline; for Smart Printer; 1500 pieces on roll; stretchable 5 - 5.2 mm; plain; snap-on type; gray



Item No.: 2009-115/000-023
WMB-Inline; for Smart Printer; 1500 pieces on roll; stretchable 5 - 5.2 mm; plain; snap-on type; green



Item No.: 2009-115/000-017
WMB-Inline; for Smart Printer; 1500 pieces on roll; stretchable 5 - 5.2 mm; plain; snap-on type; light green



Item No.: 2009-115/000-012
WMB-Inline; for Smart Printer; 1500 pieces on roll; stretchable 5 - 5.2 mm; plain; snap-on type; orange



Item No.: 2009-115/000-024
WMB-Inline; for Smart Printer; 1500 pieces on roll; stretchable 5 - 5.2 mm; plain; snap-on type; violet



Item No.: 2009-115
WMB-Inline; for Smart Printer; 1500 pieces on roll; stretchable 5 - 5.2 mm; plain; snap-on type; white



Item No.: 2009-115/000-002
WMB-Inline; for Smart Printer; 1500 pieces on roll; stretchable 5 - 5.2 mm; plain; snap-on type; yellow

1.2.4 Power tap

1.2.4.1 Power tap

Item No.: 283-407
Power tap; with 500 mm cable; for 16 mm² (283/783 Series) and 35 mm²; gray

Continued on next page

1.2.5 Tool

1.2.5.1 Operating tool



Item No.: 210-721
Operating tool; Blade: 5.5 x 0.8 mm; with a partially insulated shaft; multicoloured

Installation Notes

Installation

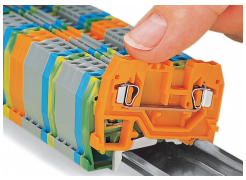

Snapping a terminal block onto the DIN-rail.

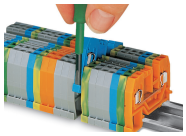

Removing a terminal block from the assembly.

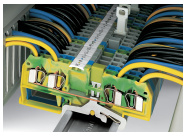

Steel DIN-rails are not suited for PEN (ground and N-conductor) applications per EN 60947-7-2 (VDE 0611, Part 3).

Conductor termination

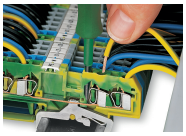

CAGE CLAMP® connection
Inserting a conductor.

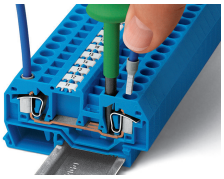

CAGE CLAMP® connection
Inserting a conductor.
With ferruled conductors, it is necessary to use a terminal block one size larger than the conductor's nominal cross-section.

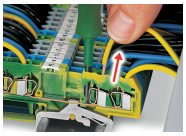

CAGE CLAMP® connection
Removing a solid conductor.

Commoning



Commoning using an adjacent jumper.
Push jumper down until fully inserted!

Marking

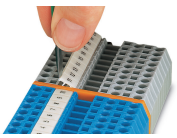

Labeling via WMB Multi Marking System.