Data Sheet | Item Number: 294-8113

Lighting connector; push-button, external; for Linect®; with direct ground contact; 3-pole; Cod. A; Lighting side: for solid conductors; Inst. side: for all conductor types; max. 2.5 mm²; Surrounding air temperature: max 85°C (T85); white

https://www.wago.com/294-8113

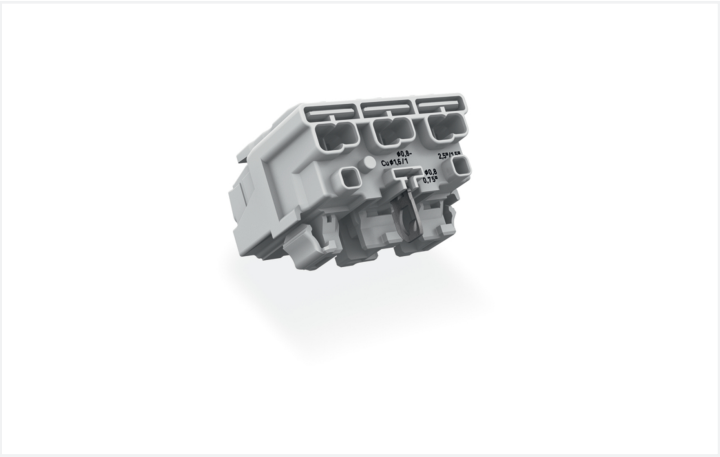

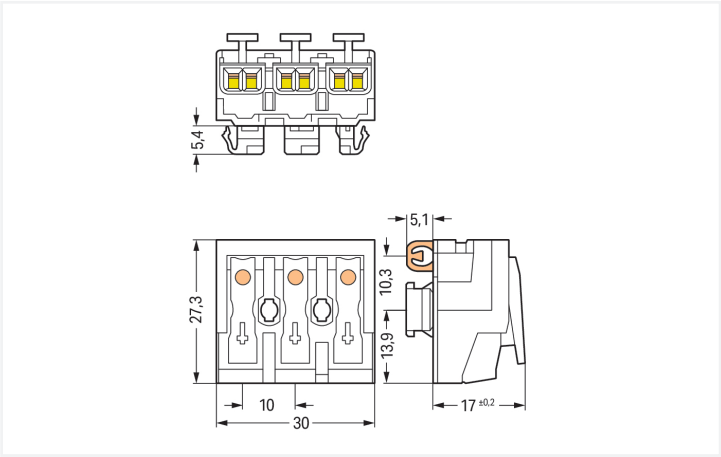

Color: white

Dimensions in mm

Field-wiring terminal block with linect®, 294 Series, push-button

Field-wiring terminal block with linect® (item number 294-8113) simplifies electrical installations. Conductors can only be connected to field-wiring terminal block with linect® if their strip length is between 8 and 9 mm . This product features four conductor terminals and utilizes Push-in CAGE CLAMP® as well as PUSH WIRE®. Our Push-in CAGE CLAMP® is a universal, maintenance-free connection solution for all conductor types, boasting a key feature: both solid and fine-stranded conductors with ferrules can be directly inserted without the need for tools or any preparation, such as crimping the ferrule. Our PUSH WIRE® connection is the quick and simple method for connecting solid conductors. The item's dimensions are (30 x 22.4 x 27.3) mm (width x height x depth). Field-wiring terminal block with linect® is suitable for conductor cross sections ranging from 0.5 mm² to 2.5 mm² on one side and for conductor cross sections ranging from 0.5 mm² to 2.5 mm² on the other side as well as conductor cross sections from 0.5 mm² to 2.5 mm² and from 0.5 mm² to 0.75 mm² depending on the conductor type.

The contact surface is coated with tin.

Electrical data

Ratings	Connection points		
Ratings per	IEC/EN 60998-1	IEC/EN 60998-1	IEC/EN 60998-1
Overvoltage category	III	III	II
Pollution degree	3	2	2
Nominal voltage	-	-	500 V
Rated impulse withstand voltage	-	-	4 kV
Rated current	-	-	24 A

Ratings	Connection points		
Ratings per	IEC/EN 60998-2-2	IEC/EN 60998-2-2	IEC/EN 60998-2-2
Overvoltage category	III	III	II
Pollution degree	3	2	2
Nominal voltage	-	-	500 V
Rated impulse withstand voltage	-	-	4 kV
Rated current	-	-	24 A

Ratings	Linect® plug-in connection		
Ratings per	IEC/EN 61984	IEC/EN 61984	IEC/EN 61984
Overvoltage category	III	III	II
Pollution degree	3	2	2
Nominal voltage	-	-	500 V
Rated impulse withstand voltage	-	-	4 kV
Rated current	-	-	16 A

Connection Data

Total number of potentials	3
Number of connection types	4
PE function	Direct PE contact

Connection 1

Connection type	External 1
Connection technology	Push-in CAGE CLAMP®
Number of connection points	2
Actuation type	Push-button
Solid conductor	0.5 … 2.5 mm² / 18 … 12 AWG
Solid conductor; push-in termination	0.5 … 2.5 mm² / 18 … 12 AWG
Stranded conductor	0.5 … 2.5 mm² / 18 … 14 AWG
Fine-stranded conductor	0.5 … 2.5 mm² / 18 … 14 AWG
Fine-stranded conductor; with insulated ferrule	0.5 … 1.5 mm² / 18 … 16 AWG
Fine-stranded conductor; with uninsulated ferrule	0.5 … 1.5 mm² / 18 … 16 AWG
Fine-stranded conductor; with ferrule; push-in termination	0.5 mm² / 18 AWG
Strip length	8 … 9 mm / 0.31 … 0.35 inches
Pole number	3

Connection 2

Connection type	Internal 2
Connection technology	PUSH WIRE®
Number of connection points	1
Actuation type	Push-in
Solid conductor	0.5 … 2.5 mm² / 18 … 14 AWG
Fine-stranded conductor; with insulated ferrule	0.5 … 1 mm² / 18 … 14 AWG
Fine-stranded conductor; with uninsulated ferrule	0.5 … 1.5 mm² / 18 … 16 AWG
Strip length	8 … 9 mm / 0.31 … 0.35 inches

Connection 3

Connection type	Internal 3
Connection technology	PUSH WIRE®
Number of connection points	1
Actuation type	Push-in
Solid conductor	0.5 … 1.5 mm² / 18 … 16 AWG
Fine-stranded conductor; with insulated ferrule	0.5 … 0.75 mm² / 18 AWG
Fine-stranded conductor; with uninsulated ferrule	0.5 … 1 mm² / 18 … 14 AWG
Strip length	8 … 9 mm / 0.31 … 0.35 inches

Connection 4

Connection type	Internal 4
Connection technology	PUSH WIRE®
Number of connection points	1
Actuation type	Push-in
Solid conductor	0.5 … 0.75 mm² / 18 AWG
Strip length	8 … 9 mm / 0.31 … 0.35 inches

Physical data

Pin spacing	10 mm / 0.394 inches
Width	30 mm / 1.181 inches
Height	22.4 mm / 0.882 inches
Height from the surface	17 mm / 0.669 inches
Depth	27.3 mm / 1.075 inches

Continued on next page

Mechanical data

Technology	Linect
Marking	N ⏚ L

Material data

Note (material data)	Information on material specifications can be found here
Color	white
Material group	IIIa
Insulation material (main housing)	Polycarbonate (PC)
Flammability class per UL94	V0
Clamping spring material	Chrome-nickel spring steel (CrNi)
Contact material	Electrolytic copper (E_{Cu})
Contact Plating	Tin
Fire load	0.153 MJ
Weight	10 g

Environmental requirements

Temperature stability	120 °C
T marking	T85

Commercial data

Product Group	8 (Misc. Chassis Mount Blocks)
PU (SPU)	500 pcs
Packaging type	Foil
Country of origin	CH
GTIN	4050821098805
Customs tariff number	85369010000

Product Classification

UNSPSC	39121409
eCl@ss 10.0	27-14-11-06
eCl@ss 9.0	27-14-11-06
ETIM 9.0	EC001284
ETIM 10.0	EC001284
ECCN	NO US CLASSIFICATION

Environmental Product Compliance

RoHS Compliance Status	Compliant,No Exemption
SCIP notification number (Austria)	c4724658-d854-4c22-8f5f-c1cd430690c6
SCIP notification number (Belgium)	b8983cf4-8a63-4a24-b94d-e1fadf07749a
SCIP notification number (Bulgaria)	0211a753-2519-4d0c-b57d-c758bef22d57
SCIP notification number (Czech Republic)	52188b56-cd7c-46fa-aaf5-967b08be522e
SCIP notification number (Denmark)	1c8f7e71-ac92-4ba0-a8d3-3af5c188f3fa
SCIP notification number (Finland)	f8605121-21a9-42ec-97cb-87f12d6b6e4e
SCIP notification number (France)	34ceff3a-3f87-45a0-a0e6-61f6468ba5c8
SCIP notification number (Germany)	cb5ee07d-b98b-46b6-a5c6-fbb1e59c2e4a
SCIP notification number (Hungary)	2ad8128e-1810-404a-a15f-40aa315fe882
SCIP notification number (Italy)	85b539a9-172b-4ab4-82a8-9d6f6e36860f
SCIP notification number (Netherlands)	d343592c-b41c-4ea5-aaad-e18b37862308
SCIP notification number (Poland)	df5c2222-850e-4cb3-830e-6cac2eaddb11
SCIP notification number (Romania)	b0ee8315-b218-4210-9944-365568b4786b
SCIP notification number (Sweden)	ef146875-5d73-435a-8381-c3d31530b42d

Continued on next page

Approvals / Certificates

General approvals

Approval	Standard	Certificate Name
ENEC 05 DEKRA Certification B.V.	EN 60998	2128791.01
VDE VDE Prüf- und Zertifizierungsinstitut	EN 61535	40029808

Declarations of conformity and manufacturer's declarations

Approval	Standard	Certificate Name
EU-Declaration of Conformity WAGO GmbH & Co. KG	-	-
UK-Declaration of Conformity WAGO GmbH & Co. KG	-	-

Downloads

Environmental Product Compliance

Compliance Search

Environmental Product Compliance 294-8113

Documentation

Additional Information

Technical Section	03.04.2019	pdf 2027.26 KB

CAD/CAE-Data

CAD data

2D/3D Models 294-8113

CAE data

WSCAD Universe 294-8113

ZUKEN Portal 294-8113