Data Sheet | Item Number: 704-5034

Interface module for system wiring; Pluggable connector per DIN 41651; Male connector; 20-pole; 16-channel relay output; 1 changeover contact; PCB terminal blocks; with output fuse; in mounting carrier; 2,50 mm²

https://www.wago.com/704-5034

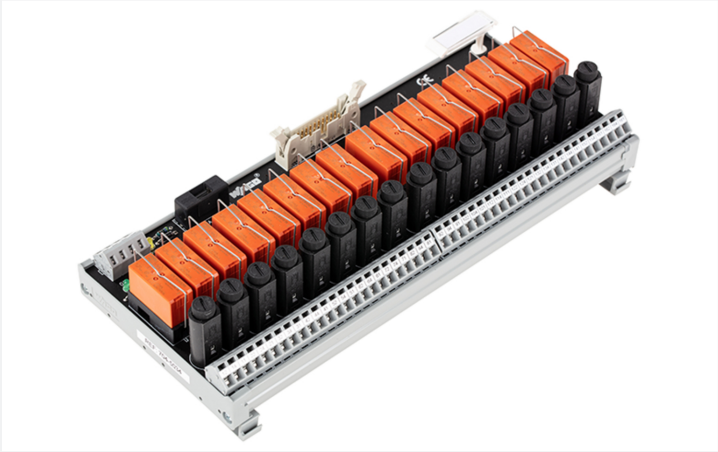

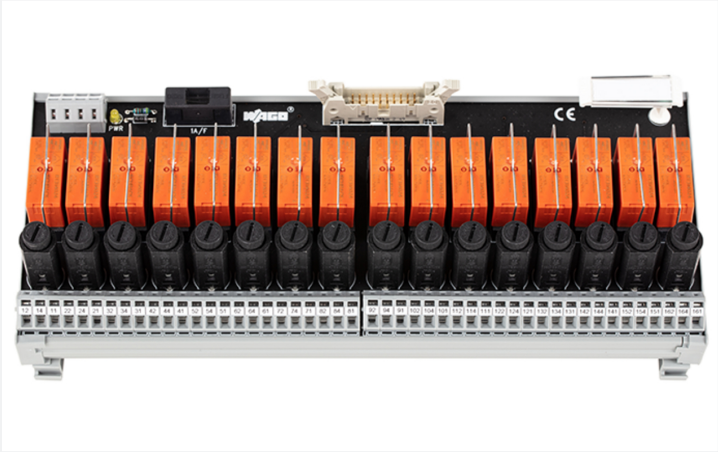

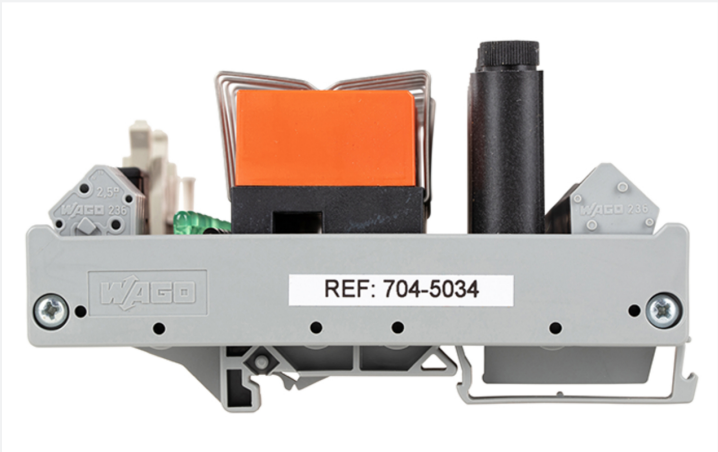

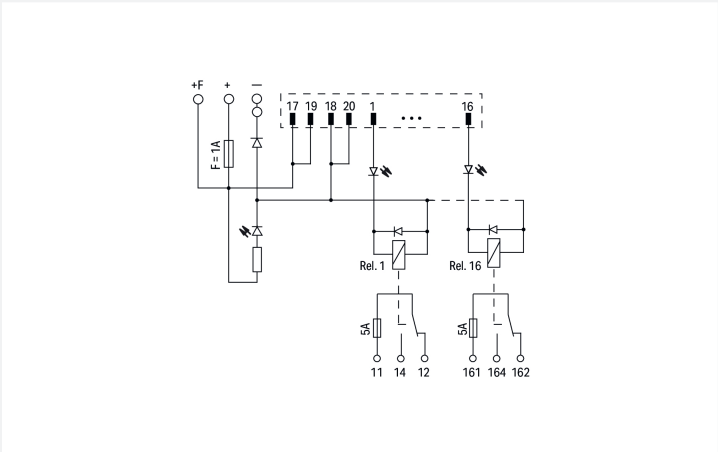

Notes

Note	Independent of the relay used, the maximum continuous current is 5 A per channel.

Electrical data

Inputs/outputs	16-channel relay output
Nominal operating voltage	24 VDC
Operating voltage range	±10 %
Number of changeover/switchover contacts	1
Limiting continuous current	5 A
Making capacity	2 ms 16 A
Switching Voltage, Max.	250 VAC; 48 VDC
Switching power (resistive) max.	AC 1250 VA; DC 50 W
Mechanical life	30 x 10^6 switching operations
Status indicator	Green LED (channel) Yellow LED (power supply)
Internal fuse	Supply: 1 A; Relay output: 5 A
WAGO Basic Relay	788-154
Specialty functions	With output fuse

Safety and protection

Rated Voltage	50 V
Rated impulse withstand voltage	0.8 kV
Pollution degree	2
Dielectric strength (control/load circuit) (AC, 1 min)	4 kVrms
Dielectric strength (load/load circuit) (AC, 1 min)	1 kVrms

Compatibility

Siemens

Siemens S7-300	6ES7 313-5BE01-0AB0 6ES7 313-5BG04-0AB0 6ES7 313-6BE01-0AB0 6ES7 313-6BF03-0AB0 6ES7 313-6CE01-0AB0 6ES7 313-6CF03-0AB0 6ES7 314-6BF01-0AB0 6ES7 314-6BG03-0AB0 6ES7 314-6CF01-0AB0 6ES7 314-6CG03-0AB0 6ES7 322-1BH01-0AA0 6ES7 322-1BH10-0AA0 6ES7 322-1BH80-0AA0 6ES7 322-1BL00-0AA0 6ES7 322-1BP00-0AA0 6ES7 322-1EH01-0AA0 6ES7 322-8BH01/8BH10-0AB0 6ES7 323-1BL00-0AA0
Siemens S7-400	6ES7 422-1BL00-0AA0
Siemens S7-1500	6ES7 511-1CK00-0AB0 6ES7 512-1CK00-0AB0 6ES7 522-1BH00-0AB0 6ES7 522-1BH01-0AB0 6ES7 522-1BH10-0AA0 6ES7 522-1BL00-0AB0 6ES7 522-1BL01-0AB0 6ES7 522-1BL10-0AA0 6ES7 522-1BP00-0AA0 6ES7 523-1BL00-0AA0
Siemens ET200SP	6ES7 132-6BH00-0AA0 6ES7 132-6BH00-2AA0 6ES7 132-6BH01-0BA0 6ES7 132-6BH01-2BA0

GE Fanuc

GE Fanuc 9030	IC693 MDL740 IC693 MDL742 IC693 MDL753
GE Fanuc RX3i	IC694 MDL753

Schneider

Schneider Modicon TM3	TM3 DQ16T(G) TM3 DQ16TK TM3 DQ32TK
Schneider Modicon M340	BMX DDO 1602 BMX DDO 3202K BMX DDO 6402K BMX DDM 3202K
Schneider Modicon Quantum	140 DDO 353 00 140 DDO 353 01 140 DDO 364 00 140 DVO 853 00
Schneider TSX	TSX DSY 16T2 TSX DSY 32T2K TSX DSY 64T2K TSX DMY 28FK TSX DMY 28RFK TSX DSZ 32T2 TSX DMZ 28DT TSX DMZ 28DTK TSX DMZ 64DTK
Schneider Twido	TM2 DDO 16TK TM2 DDO 32TK

Rockwell

Rockwell Compact Logix	1769 - OB16 1769 - OB16P 1769 - OB32 1769 - OB32T
Rockwell Control Logix	1756 - OB16E 1756 - OB32

Continued on next page

Omron	
Omron CJ1W	CJ1W-MD232 CJ1W-OD212 CJ1W-OD232 CJ1W-OD262

WAGO	
WAGO I/O System 750	750-1500
WAGO I/O System 753	753-530 (x2)

Connection Data

Connection 1

Pluggable connector	Pluggable connector per DIN 41651; male connector
Pole number 1	20
Connection type	System
Note (conductor cross-section)	12 AWG: THHN, THWN
Mating direction	vertical

Connection 2

Design	PCB terminal blocks
Pole number	48
Connection type	Field
WAGO connector	WAGO 236 Series
Solid conductor	0.08 … 2.5 mm² / 28 … 12 AWG
Fine-stranded conductor	0.08 … 2.5 mm² / 28 … 12 AWG
Strip length	5 … 6 mm / 0.2 … 0.24 inches

Connection 3

Design	PCB terminal blocks
Pole number	4
Connection type	Power supply
WAGO connector	WAGO 236 Series
Solid conductor	0.08 … 2.5 mm² / 28 … 12 AWG
Fine-stranded conductor	0.08 … 2.5 mm² / 28 … 12 AWG
Strip length	5 … 6 mm / 0.2 … 0.24 inches

Physical data

Width	247 mm / 9.724 inches
Height	105 mm / 4.134 inches
Depth from upper-edge of DIN-rail	55 mm / 2.165 inches

Mechanical data

Mounting type	DIN-35 rail

Material data

Contact material (relay)	AgNi 90/10
Fire load	5.148 MJ
Weight	685 g

Environmental requirements

Ambient temperature (operation)	-25 … +50 °C
Ambient temperature (storage)	-40 … +70 °C
Relative humidity	≤ 85 % (non-condensing)

Continued on next page

Commercial data

Product Group	30 (WAGO France)
PU (SPU)	1 pcs
Packaging type	Box
Country of origin	FR
GTIN	4045454980153
Customs tariff number	85364900990

Product Classification

UNSPSC	39121529
eCl@ss 10.0	27-14-11-52
eCl@ss 9.0	27-14-11-52
ETIM 9.0	EC002780
ETIM 10.0	EC002780
ECCN	NO US CLASSIFICATION

Environmental Product Compliance

RoHS Compliance Status	Compliant,No Exemption

Approvals / Certificates

General approvals

Approval	Standard	Certificate Name
EAC GZO Almaty Standart	TP TC 004/2011	EAC CoC 03084

Declarations of conformity and manufacturer's declarations

Approval	Standard	Certificate Name
EU-Declaration of Conformity WAGO GmbH & Co. KG	-	-
UK-Declaration of Conformity WAGO GmbH & Co. KG	-	-

Downloads

Environmental Product Compliance

Compliance Search

Environmental Product Compliance 704-5034

Documentation

Bid Text

704-5034	19.02.2019	xml 4.17 KB	
704-5034	20.11.2015	doc 27.00 KB	

Continued on next page

CAD/CAE-Data

CAE data	
EPLAN Data Portal 704-5034	
WSCAD Universe 704-5034	

1 Compatible Products

1.1 Optional Accessories

1.1.1 Basic relay

1.1.1.1 Basic relay



Item No.: 788-154
Basic relay; Nominal input voltage: 24 VDC; 1 changeover contact; Limiting continuous current: 16 A; Module width: 13 mm; Module height: 15 mm

1.1.2 Cables and connectors

1.1.2.1 Connecting cable



Item No.: 706-100/1300-200
Connection cable; 20-pole; Pluggable connector per DIN 41651; open-ended; Length: 2 m; Conductor cross-section: 0.14 mm²; UR components



Item No.: 706-100/1300-400
Connection cable; 20-pole; Pluggable connector per DIN 41651; open-ended; Length: 4 m; Conductor cross-section: 0.14 mm²; UR components

1.1.2.2 System cable



Item No.: 706-2300/300-100
System cable; for Siemens S7-300; 16 digital inputs or outputs; Length: 1 m; Conductor cross-section: 0.14 mm²



Item No.: 706-2300/300-200
System cable; for Siemens S7-300; 16 digital inputs or outputs; Length: 2 m; Conductor cross-section: 0.14 mm²



Item No.: 706-2300/300-300
System cable; for Siemens S7-300; 16 digital inputs or outputs; Length: 3 m; Conductor cross-section: 0.14 mm²



Item No.: 706-2300/301-100
System cable; for Siemens S7-300; 2 x 16 digital inputs or outputs; Length: 1 m; Conductor cross-section: 0.14 mm²



Item No.: 706-2300/301-200
System cable; for Siemens S7-300; 2 x 16 digital inputs or outputs; Length: 2 m; Conductor cross-section: 0.14 mm²



Item No.: 706-2300/301-300
System cable; for Siemens S7-300; 2 x 16 digital inputs or outputs; Length: 3 m; Conductor cross-section: 0.14 mm²



Item No.: 706-2300/200-100
System cable; for Siemens S7-300; 2 x 16 digital outputs; Length: 1 m; Conductor cross-section: 0.14 mm²



Item No.: 706-2300/200-200
System cable; for Siemens S7-300; 2 x 16 digital outputs; Length: 2 m; Conductor cross-section: 0.14 mm²



Item No.: 706-2300/200-300
System cable; for Siemens S7-300; 2 x 16 digital outputs; Length: 3 m; Conductor cross-section: 0.14 mm²



Item No.: 706-7753/301-200
System cable; for WAGO-I/O-SYSTEM, 753 Series; 2 x 16 digital inputs or outputs; Length: 2 m; Conductor cross-section: 0.14 mm²

Continued on next page

1.1.3 Marking

1.1.3.1 Marking strip

Item No.: 709-196
Marking strips; for laser printer; translucent



Item No.: 2009-110
Marking strips; for Smart Printer; on reel; not stretchable; plain; snap-on type; white

Item No.: 709-177
Marking strips; on reel; 7.5 mm wide; not stretchable; plain; snap-on type; translucent



Item No.: 709-178
Marking strips; on reel; 7.5 mm wide; not stretchable; plain; snap-on type; white