Data Sheet | Item Number: 713-1107/107-047/033-000

1-conductor female connector, 2-row; CAGE CLAMP®; 1.5 mm²; Pin spacing 3.5 mm; 14-pole; 100% protected against mismating; Screw flange; Strain relief plate; direct marking; black

https://www.wago.com/713-1107/107-047/033-000



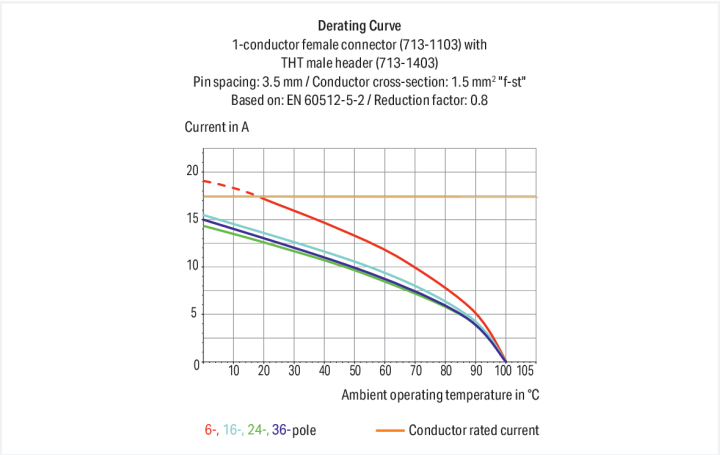

Color: ■ black

Similar to illustration

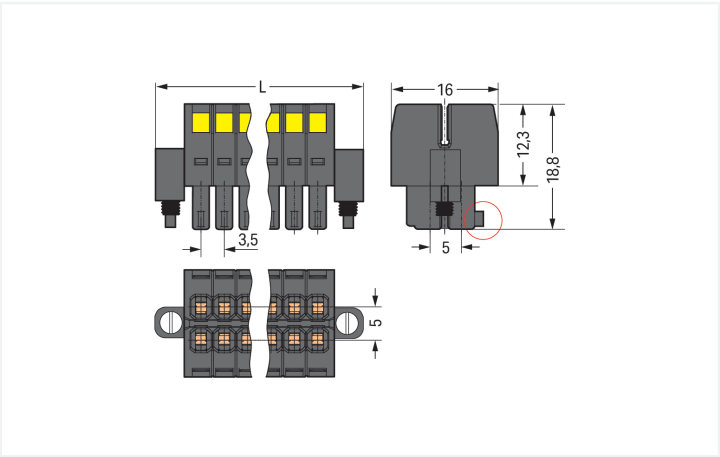

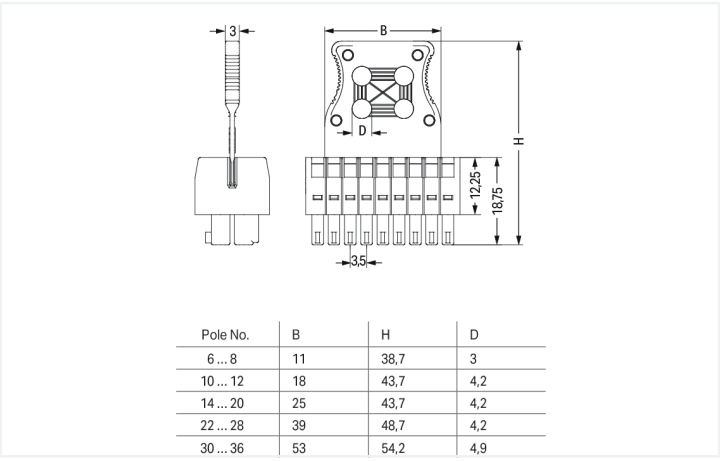

Pole No.	B	H	D
6 ... 8	11	38,7	3
10 ... 12	18	43,7	4,2
14 ... 20	25	43,7	4,2
22 ... 28	39	48,7	4,2
30 ... 36	53	54,2	4,9

Dimensions in mm
L = [(pole no./2) – 1] x pin spacing + 13.6 mmCoding finger (red circle)

Dimensions in mm
The arrangement of the attachments for cable ties allows single conductors or multi-core cables to be secured in different ways. The width of the cable ties must correspond to the hole dimensions of the strain relief plates shown above. Cable ties and binding tools are not offered by WAGO.

Female connector, 713 Series, with 3.5 mm pin spacing

This female connector (item number 713-1107/107-047/033-000) is designed for seamless electrical installations. Ensure that the strip lengths are between 6 and 7 mm when connecting conductors to this female connector. Featuring one conductor terminal along with CAGE CLAMP®, this product is highly versatile. Our CAGE CLAMP® connection provides a safe and maintenance-free way to connect all types of conductors. You do not need to prepare the conductor in any way, such as crimping ferrules. The dimensions are (34.6 x 16 x 43.7) mm (width x height x depth). Depending on the conductor type, this female connector is ideal for conductor cross sections ranging from 0.08 mm² to 1.5 mm².

The contact surface is coated with tin. You can secure connected conductors using the strain relief plate to make cables more manageable..

Notes

Safety Information	The *MCS – MULTI CONNECTION SYSTEM* includes connectors without breaking capacity in accordance with DIN EN 61984. When used as intended, these connectors must not be connected/disconnected when live or under load.When used as intended, these connectors must not be connected/disconnected when live or under load. The circuit design should ensure header pins, which can be touched, are not live when unmated.
Variants:	Other pole numbers Gold-plated or partially gold-plated contact surfaces Other versions (or variants) can be requested from WAGO Sales or configured at https://configurator.wago.com/.

Electrical data

Ratings per	IEC/EN 60664-1		
Overvoltage category	III	III	II
Pollution degree	3	2	2
Nominal voltage	80 V	160 V	250 V
Rated impulse withstand voltage	2.5 kV	2.5 kV	2.5 kV
Rated current	10 A	10 A	10 A

Approvals per	UL 1059		
Use group	B	C	D
Rated voltage	300 V	50 V	-
Rated current	10 A	10 A	-

Approvals per	CSA		
Use group	B	C	D
Rated voltage	300 V	-	-
Rated current	10 A	-	-

Connection Data

Clamping units	14
Total number of potentials	14
Number of connection types	1
Number of levels	2

Connection 1

Connection technology	CAGE CLAMP®
Actuation type	Operating tool
Actuation direction 1	Operation perpendicular to conductor entry
Solid conductor	0.08 … 1.5 mm² / 28 … 16 AWG
Fine-stranded conductor	0.08 … 1.5 mm² / 28 … 16 AWG
Fine-stranded conductor; with insulated ferrule	0.25 … 1 mm²
Fine-stranded conductor; with uninsulated ferrule	0.25 … 1 mm²
Strip length	6 … 7 mm / 0.24 … 0.28 inches
Pole number	14
Conductor entry direction to mating direction	0 °

Physical data

Pin spacing	3.5 mm / 0.138 inches
Width	34.6 mm / 1.362 inches
Height	16 mm / 0.63 inches
Depth	43.7 mm / 1.72 inches

Continued on next page

Mechanical data

Variable coding	Yes
Anti-rotation protection	Yes

Plug-in connection

Contact type (pluggable connector)	Female connector/socket
Connector (connection type)	for conductor
Mismating protection	Yes
Locking of plug-in connection	Screw flange
Strain relief	Strain relief plate

Material data

Note (material data)	Information on material specifications can be found here
Color	black
Material group	II
Insulation material (main housing)	Glass fiber-reinforced polyamide (PA66 GF)
Flammability class per UL94	V0
Clamping spring material	Chrome-nickel spring steel (CrNi)
Contact material	Copper alloy
Contact Plating	Tin
Fire load	0.086 MJ
Weight	8.8 g

Environmental requirements

Limit temperature range	-60 … +100 °C
Processing temperature	-35 … +60 °C

Environmental Testing

Test specification: Railway applications – Rolling stock – Electronic equipment	DIN EN 50155 (VDE 0115-200):2022-06
Test procedure: Railway applications – Rolling stock equipment – Vibration and shock tests	DIN EN 61373 (VDE 0115-0106):2011-04
Spectrum/Mounting location	Service life test, Category 1, Class A/B
Functional test with noise-like oscillations	Test passed according to Section 8 of the standard
Frequency	f_1 = 5 Hz to f_2 = 150 Hz
Acceleration	0.101g (highest test level used for all axes)
Test duration per axis	10 min.
Test directions	X, Y and Z axes
Monitoring of contact faults and interruptions	Passed
Voltage drop measurement before and after each axis	Passed
Simulated service life test through increased levels of noise-like oscillations	Test passed according to Section 9 of the standard
Frequency	f_1 = 5 Hz to f_2 = 150 Hz
Acceleration	0.572g (highest test level used for all axes)
Test duration per axis	5 h
Test directions	X, Y and Z axes
Extended testing: Monitoring of contact faults and interruptions	Passed
Extended testing: Voltage drop measurement before and after each axis	Passed
Shock test	Test passed according to Section 10 of the standard
Shock pulse form	Half sine

Continued on next page

Environmental Testing

Acceleration	5g (highest test level used for all axes)
Shock duration	30 ms
Number of shocks (per axis)	3 pos. und 3 neg.
Test directions	X, Y and Z axes
Extended testing: Monitoring of contact faults and interruptions	Passed
Extended testing: Voltage drop measurement before and after each axis	Passed
Vibration and shock stress for rolling stock equipment	Passed

Commercial data

Product Group	3 (Multi Conn. System)
PU (SPU)	50 pcs
Packaging type	Box
Country of origin	PL
GTIN	4050821178002
Customs tariff number	85366990990

Product Classification

UNSPSC	39121409
eCl@ss 10.0	27-14-11-06
eCl@ss 9.0	27-14-11-06
ETIM 9.0	EC001284
ETIM 10.0	EC001284
ECCN	NO US CLASSIFICATION

Environmental Product Compliance

RoHS Compliance Status	Compliant,No Exemption
SCIP notification number (Austria)	542fbee9-5d13-40dc-ae61-78b187b67a06
SCIP notification number (Belgium)	3faa26a7-124c-4fd4-8cdb-ac7e56ec9766
SCIP notification number (Bulgaria)	3d8b43c4-7cd8-42bd-b295-cfe5fbf6dad0
SCIP notification number (Czech Republic)	93a754c1-d07e-4e84-b19f-08d12594fe9b
SCIP notification number (Denmark)	61291929-7e6e-485a-bc65-a100f6dd2e2d
SCIP notification number (Finland)	d70a1029-c92d-4a4b-b9f2-7e4c08db4f1b
SCIP notification number (France)	988e4aca-dd68-4bba-af18-905ae9719f56
SCIP notification number (Germany)	4162d646-f33a-48ec-ae7f-3dba0ec38e3f
SCIP notification number (Hungary)	f5fa53a9-2bb8-41a8-870b-fdb66b78a563
SCIP notification number (Italy)	a32feb84-ab2d-4c3c-8764-fe579576016b
SCIP notification number (Netherlands)	6081dc73-610f-4f4f-9f02-d6f320909447
SCIP notification number (Poland)	e47736bf-f6d3-4739-a13f-94135bc9a6de
SCIP notification number (Romania)	476cb059-cfc3-46ef-a2f2-401da7249410
SCIP notification number (Sweden)	9d0e5717-7f65-4f09-a388-54ddf575fcf2

Continued on next page

Approvals / Certificates

General approvals

Approval	Standard	Certificate Name
CB DEKRA Certification B.V.	IEC 61984	NL-102427
CSA CSA Group	C22.2	2315087
KEMA/KEUR DEKRA Certification B.V.	EN 61984	71-133740
UL Underwriters Laboratories Inc.	UL 1059	UL-US-L45172-6187124-1

Declarations of conformity and manufacturer's declarations

Approval	Standard	Certificate Name
Railway WAGO GmbH & Co. KG	-	Z00004422.000

Downloads

Environmental Product Compliance

Compliance Search

Documentation

Additional Information

Technical Section	03.04.2019	pdf 2027.26 KB

1 Compatible Products

1.1 System counterpart

1.1.1 Male connector/plug



Item No.: 713-1427/107-000
THT male header, 2-row; 0.8 x 0.8 mm solder pin; angled; 100% protected against mismating; Threaded flange; Pin spacing 3.5 mm; 14-pole; black



Item No.: 713-1407/107-000
THT male header, 2-row; 0.8 x 0.8 mm solder pin; straight; 100% protected against mismating; Threaded flange; Pin spacing 3.5 mm; 14-pole; black

Continued on next page

1.2 Optional Accessories

1.2.1 Ferrule

1.2.1.1 Ferrule



Item No.: 216-321
Ferrule; Sleeve for 0.25 mm² / AWG 24; insulated; electro-tin plated; yellow

Item No.: 216-131
Ferrule; Sleeve for 0.25 mm² / AWG 24; uninsulated; electro-tin plated; silver-colored

Item No.: 216-322
Ferrule; Sleeve for 0.34 mm² / 22 AWG; insulated; electro-tin plated; light turquoise

Item No.: 216-132
Ferrule; Sleeve for 0.34 mm² / 22 AWG; uninsulated; electro-tin plated

Item No.: 216-221
Ferrule; Sleeve for 0.5 mm² / 20 AWG; insulated; electro-tin plated; white



Item No.: 216-121
Ferrule; Sleeve for 0.5 mm² / AWG 22; uninsulated; electro-tin plated; silver-colored

Item No.: 216-222
Ferrule; Sleeve for 0.75 mm² / 18 AWG; insulated; electro-tin plated; gray



Item No.: 216-122
Ferrule; Sleeve for 0.75 mm² / 18 AWG; uninsulated; electro-tin plated; silver-colored

Item No.: 216-223
Ferrule; Sleeve for 1 mm² / AWG 18; insulated; electro-tin plated; red



Item No.: 216-123
Ferrule; Sleeve for 1 mm² / AWG 18; uninsulated; electro-tin plated; silver-colored

1.2.2 Stickers with operating instructions

1.2.2.1 Stickers with operating instructions



Item No.: 210-493
Stickers for operating instructions

1.2.3 Strain relief

1.2.3.1 Strain relief plate



Item No.: 713-127
Strain relief plate; for female connectors; 25 mm wide; 1 part; Pin spacing 3.5 mm; black

1.2.4 Tool

1.2.4.1 Operating tool



Item No.: 210-719
Operating tool; Blade: 2.5 x 0.4 mm; with a partially insulated shaft



Item No.: 210-647
Operating tool; Blade: 2.5 x 0.4 mm; with a partially insulated shaft; multicoloured

Continued on next page

Installation Notes

Conductor termination

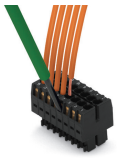

Inserting a conductor via (2.5 x 0.4) mm screwdriver.

Locking system

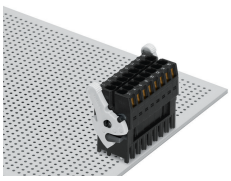

Lever as a lock – when closed, female connector is locked.

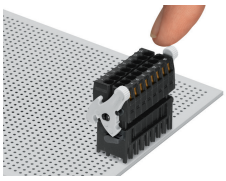

Lever as a disconnection aid – when opened, female connector is disconnected. Rotating the lever lifts the female connector out of the male header.

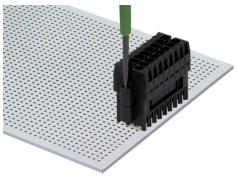

Screw interlock can only be disconnected using a tool.

Coding

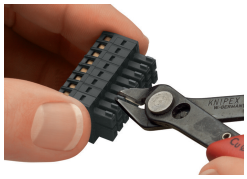

Coding a female connector by removing coding finger(s).

Strain relief



Strain relief plate for field assembly

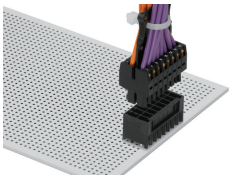

Centered strain relief plate anchors conductors for easy disconnection.