Data Sheet | Item Number: 713-1108/037-9037/033-000

1-conductor female connector, 2-row; CAGE CLAMP®; 1.5 mm²; Pin spacing 3.5 mm; 16-pole; 100% protected against mismating; Levers; Strain relief plate; direct marking; black

https://www.wago.com/713-1108/037-9037/033-000



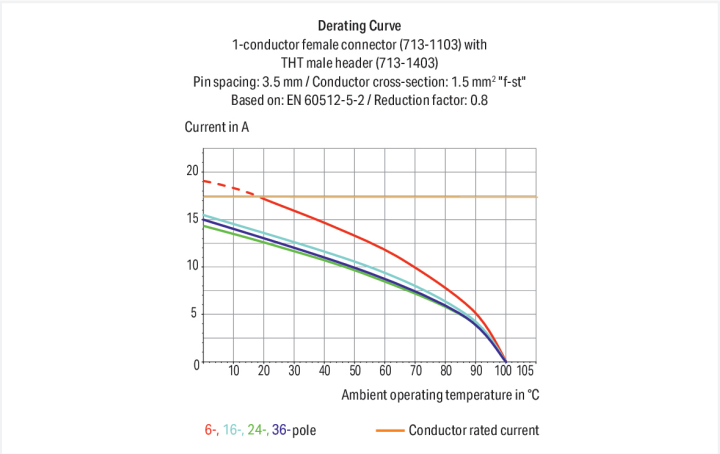

Color: ■ black

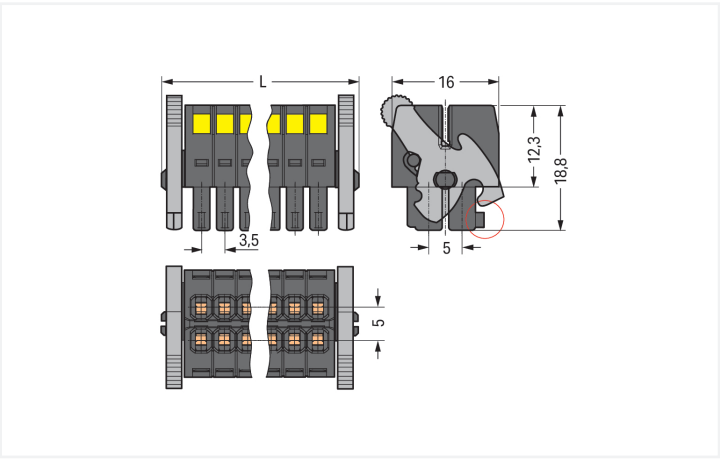

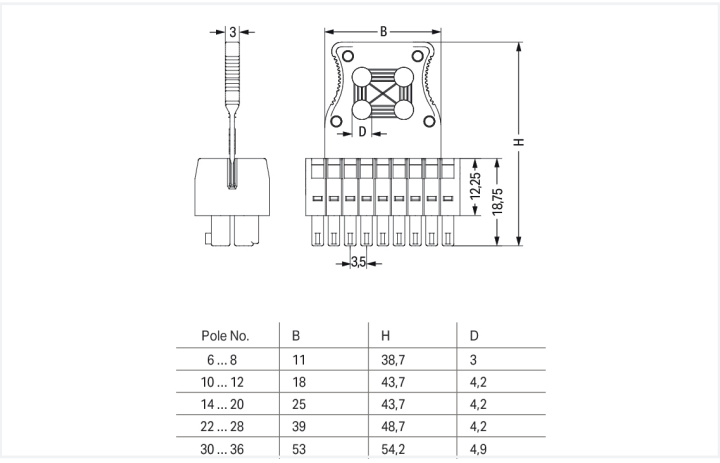

Pole No.	B	H	D
6 ... 8	11	38,7	3
10 ... 12	18	43,7	4,2
14 ... 20	25	43,7	4,2
22 ... 28	39	48,7	4,2
30 ... 36	53	54,2	4,9

Dimensions in mm
L = [(pole no./2) – 1] x pin spacing + 12.2 mmCoding finger (red circle)

Dimensions in mm
The arrangement of the attachments for cable ties allows single conductors or multi-core cables to be secured in different ways. The width of the cable ties must correspond to the hole dimensions of the strain relief plates shown above. Cable ties and binding tools are not offered by WAGO.

Female connector, 713 Series, black

This female connector (item number 713-1108/037-9037/033-000) simplifies electrical installations. Conductors should only be connected to this female connector if their strip length is between 6 and 7 mm . This product features one conductor terminal and utilizes CAGE CLAMP®. Our proven universal connection known as CAGE CLAMP® is industry-leading when it comes to connection technology and electrical interconnections. Dimensions: (36.7 x 16.5 x 43.7) mm (width x height x depth). This female connector is suitable for conductor cross sections ranging from 0.08 mm² to 1.5 mm².

The contact surface is coated with tin. The strain relief plate secures the connected conductorsand facilitates wire management..

Notes

Safety Information	The *MCS – MULTI CONNECTION SYSTEM* includes connectors without breaking capacity in accordance with DIN EN 61984. When used as intended, these connectors must not be connected/disconnected when live or under load.When used as intended, these connectors must not be connected/disconnected when live or under load. The circuit design should ensure header pins, which can be touched, are not live when unmated.
Variants:	Other pole numbers Gold-plated or partially gold-plated contact surfaces Other versions (or variants) can be requested from WAGO Sales or configured at https://configurator.wago.com/.

Electrical data

Ratings per	IEC/EN 60664-1		
Overvoltage category	III	III	II
Pollution degree	3	2	2
Nominal voltage	80 V	160 V	250 V
Rated impulse withstand voltage	2.5 kV	2.5 kV	2.5 kV
Rated current	10 A	10 A	10 A

Approvals per	UL 1059		
Use group	B	C	D
Rated voltage	300 V	50 V	-
Rated current	10 A	10 A	-

Approvals per	CSA		
Use group	B	C	D
Rated voltage	300 V	-	-
Rated current	10 A	-	-

Connection Data

Clamping units	16
Total number of potentials	16
Number of connection types	1
Number of levels	2

Connection 1

Connection technology	CAGE CLAMP®
Actuation type	Operating tool
Actuation direction 1	Operation perpendicular to conductor entry
Solid conductor	0.08 … 1.5 mm² / 28 … 16 AWG
Fine-stranded conductor	0.08 … 1.5 mm² / 28 … 16 AWG
Fine-stranded conductor; with insulated ferrule	0.25 … 1 mm²
Fine-stranded conductor; with uninsulated ferrule	0.25 … 1 mm²
Strip length	6 … 7 mm / 0.24 … 0.28 inches
Pole number	16
Conductor entry direction to mating direction	0 °

Physical data

Pin spacing	3.5 mm / 0.138 inches
Width	36.7 mm / 1.445 inches
Height	16.5 mm / 0.65 inches
Depth	43.7 mm / 1.72 inches

Continued on next page

Mechanical data

Variable coding	Yes
Anti-rotation protection	Yes

Plug-in connection

Contact type (pluggable connector)	Female connector/socket
Connector (connection type)	for conductor
Mismating protection	Yes
Locking of plug-in connection	Locking lever
Strain relief	Strain relief plate

Material data

Note (material data)	Information on material specifications can be found here
Color	black
Material group	II
Insulation material (main housing)	Glass fiber-reinforced polyamide (PA66 GF)
Flammability class per UL94	V0
Clamping spring material	Chrome-nickel spring steel (CrNi)
Contact material	Copper alloy
Contact Plating	Tin
Fire load	0.112 MJ
Weight	10 g

Environmental requirements

Limit temperature range	-60 … +100 °C
Processing temperature	-35 … +60 °C

Commercial data

Product Group	3 (Multi Conn. System)
PU (SPU)	25 pcs
Packaging type	Box
Country of origin	PL
GTIN	4050821177630
Customs tariff number	85366990990

Product Classification

UNSPSC	39121409
eCl@ss 10.0	27-14-11-06
eCl@ss 9.0	27-14-11-06
ETIM 9.0	EC001284
ETIM 10.0	EC001284
ECCN	NO US CLASSIFICATION

Continued on next page

Environmental Product Compliance

RoHS Compliance Status	Compliant,No Exemption
SCIP notification number (Austria)	aebd4750-9d97-4202-931f-d9dcafb87fea
SCIP notification number (Belgium)	ca420085-225b-4e1e-a856-a2c4e3397be1
SCIP notification number (Bulgaria)	5a4035e0-e2be-4f99-a447-e746c612d440
SCIP notification number (Czech Republic)	8893a00a-3595-4e63-a8db-4385b5b71c8f
SCIP notification number (Denmark)	1644bed3-6dc4-4e31-8591-559e4aaee745
SCIP notification number (Finland)	6910a937-e41c-430d-a653-fa6c241dc389
SCIP notification number (France)	aff19595-0073-4631-bee5-248bc3dd40c0
SCIP notification number (Germany)	16319dbe-af94-4d3b-a173-ded3d80d3dff
SCIP notification number (Hungary)	ee285df4-a932-4a36-990e-9ffa0596375b
SCIP notification number (Italy)	2838c134-ebb2-4bb4-a907-34507e4af8c8
SCIP notification number (Netherlands)	7395acd1-4505-4a25-9735-f6315608d0c4
SCIP notification number (Poland)	966c794f-c419-4c63-b30b-4d4493b610fb
SCIP notification number (Romania)	a2e604bf-a149-4da0-aa6f-03c84d2a7697
SCIP notification number (Sweden)	6b458de3-5a99-4604-8c83-15ba0e088c36

Approvals / Certificates

General approvals

Approval	Standard	Certificate Name
CB DEKRA Certification B.V.	IEC 61984	NL-102427
CSA CSA Group	C22.2	2315087
KEMA/KEUR DEKRA Certification B.V.	EN 61984	71-133740

Declarations of conformity and manufacturer's declarations

Approval	Standard	Certificate Name
Railway WAGO GmbH & Co. KG	-	Z00004422.000

Downloads

Environmental Product Compliance

Compliance Search

Documentation

Additional Information

Technical Section	03.04.2019	pdf 2027.26 KB	

Continued on next page

1 Compatible Products

1.1 System counterpart

1.1.1 Male connector/plug



Item No.: 713-1428/116-000/997-407
THR male header, 2-row; 0.8 x 0.8 mm solder pin; angled; 100% protected against mismating; Levers; in tape-and-reel packaging; Pin spacing 3.5 mm; 16-pole; black



Item No.: 713-1428/116-000
THR male header, 2-row; 0.8 x 0.8 mm solder pin; angled; 100% protected against mismating; Levers; Pin spacing 3.5 mm; 16-pole; black



Item No.: 713-1408/116-000/997-407
THR male header, 2-row; 0.8 x 0.8 mm solder pin; straight; 100% protected against mismating; Levers; in tape-and-reel packaging; Pin spacing 3.5 mm; 16-pole; black



Item No.: 713-1408/116-000
THR male header, 2-row; 0.8 x 0.8 mm solder pin; straight; 100% protected against mismating; Levers; Pin spacing 3.5 mm; 16-pole; black



Item No.: 713-1428/037-000
THT male header, 2-row; 0.8 x 0.8 mm solder pin; angled; 100% protected against mismating; Levers; Pin spacing 3.5 mm; 16-pole; black



Item No.: 713-1408/037-000
THT male header, 2-row; 0.8 x 0.8 mm solder pin; straight; 100% protected against mismating; Levers; Pin spacing 3.5 mm; 16-pole; black

1.2 Optional Accessories

1.2.1 Ferrule

1.2.1.1 Ferrule

Item No.: 216-321
Ferrule; Sleeve for 0.25 mm² / AWG 24; insulated; electro-tin plated; yellow

Item No.: 216-131
Ferrule; Sleeve for 0.25 mm² / AWG 24; uninsulated; electro-tin plated; silver-colored

Item No.: 216-322
Ferrule; Sleeve for 0.34 mm² / 22 AWG; insulated; electro-tin plated; light turquoise

Item No.: 216-132
Ferrule; Sleeve for 0.34 mm² / 22 AWG; uninsulated; electro-tin plated

Item No.: 216-221
Ferrule; Sleeve for 0.5 mm² / 20 AWG; insulated; electro-tin plated; white



Item No.: 216-121
Ferrule; Sleeve for 0.5 mm² / AWG 22; uninsulated; electro-tin plated; silver-colored

Item No.: 216-222
Ferrule; Sleeve for 0.75 mm² / 18 AWG; insulated; electro-tin plated; gray



Item No.: 216-122
Ferrule; Sleeve for 0.75 mm² / 18 AWG; uninsulated; electro-tin plated; silver-colored

Item No.: 216-223
Ferrule; Sleeve for 1 mm² / AWG 18; insulated; electro-tin plated; red



Item No.: 216-123
Ferrule; Sleeve for 1 mm² / AWG 18; uninsulated; electro-tin plated; silver-colored

1.2.2 Stickers with operating instructions

1.2.2.1 Stickers with operating instructions



Item No.: 210-493
Stickers for operating instructions

Continued on next page

1.2.3 Strain relief

1.2.3.1 Strain relief plate



Item No.: 713-127
Strain relief plate; for female connectors; 25 mm wide; 1 part; Pin spacing 3.5 mm; black

1.2.4 Tool

1.2.4.1 Operating tool



Item No.: 210-719
Operating tool; Blade: 2.5 x 0.4 mm; with a partially insulated shaft



Item No.: 210-647
Operating tool; Blade: 2.5 x 0.4 mm; with a partially insulated shaft; multicoloured

Installation Notes

Conductor termination

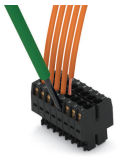

Inserting a conductor via (2.5 x 0.4) mm screwdriver.

Locking system

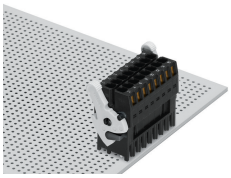

Lever as a lock – when closed, female connector is locked.

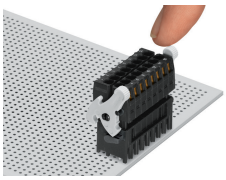

Lever as a disconnection aid – when opened, female connector is disconnected. Rotating the lever lifts the female connector out of the male header.

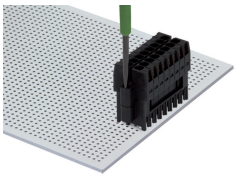

Screw interlock can only be disconnected using a tool.

Coding

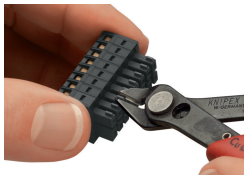

Coding a female connector by removing coding finger(s).

Continued on next page

Strain relief



Strain relief plate for field assembly

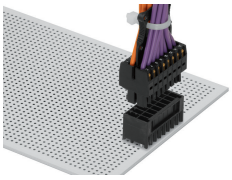

Centered strain relief plate anchors conductors for easy disconnection.