# Data Sheet | Item Number: 713-1109/037-9037/033-000

1-conductor female connector, 2-row; CAGE CLAMP®; 1.5 mm²; Pin spacing 3.5 mm; 18-pole; 100% protected against mismating; Levers; Strain relief plate; direct marking; black

https://www.wago.com/713-1109/037-9037/033-000



Color: ■ black

Similar to illustration

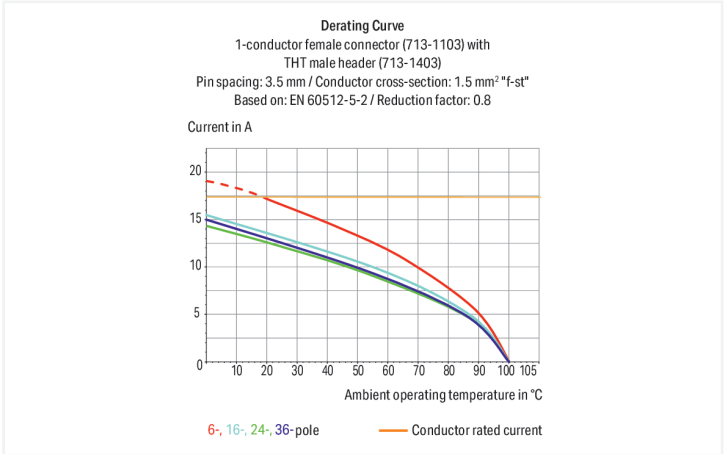


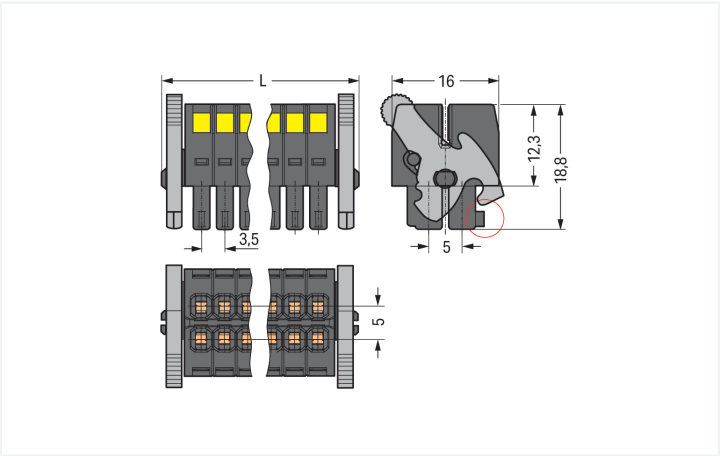


Dimensions in mm

L = [(pole no./2) – 1] x pin spacing + 12.2 mmCoding finger (red circle)

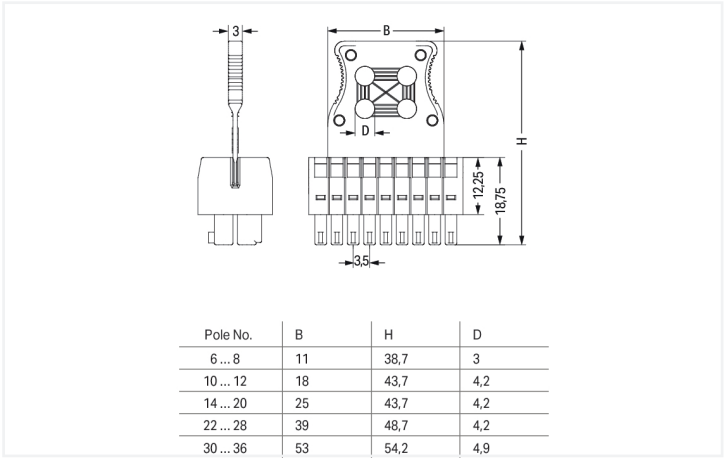


| Pole No. | B | H | D |
|---|---|---|---|
| 6 ... 8 | 11 | 38,7 | 3 |
| 10 ... 12 | 18 | 43,7 | 4,2 |
| 14 ... 20 | 25 | 43,7 | 4,2 |
| 22 ... 28 | 39 | 48,7 | 4,2 |
| 30 ... 36 | 53 | 54,2 | 4,9 |

Dimensions in mm

The arrangement of the attachments for cable ties allows single conductors or multi-core cables to be secured in different ways. The width of the cable ties must correspond to the hole dimensions of the strain relief plates shown above. Cable ties and binding tools are not offered by WAGO.

Female connector, 713 Series, CAGE CLAMP®

Our female connector (item number 713-1109/037-9037/033-000) is designed for seamless electrical installations. Conductors can only be connected to this female connector if their strip length is between 6 and 7 mm . This product features one conductor terminal and utilizes CAGE CLAMP®. Our proven universal connection known as CAGE CLAMP® is industry-leading when it comes to connection technology and electrical interconnections. The item's dimensions are (40.2 x 16.5 x 43.7) mm (width x height x depth). Depending on the type of conductor, this female connector is ideal for conductor cross sections ranging from 0.08 mm² to 1.5 mm².

Tin is used for coating the contact surfaces. You can secure connected conductors with the strain relief plate to make cables more manageable..

## Notes

| | |
|---|---|
| Safety Information | The *MCS – MULTI CONNECTION SYSTEM* includes connectors without breaking capacity in accordance with DIN EN 61984. When used as intended, these connectors must not be connected/disconnected when live or under load.When used as intended, these connectors must not be connected/disconnected when live or under load. The circuit design should ensure header pins, which can be touched, are not live when unmated. |
| Variants: | Other pole numbers<br>Gold-plated or partially gold-plated contact surfaces<br>Other versions (or variants) can be requested from WAGO Sales or configured at https://configurator.wago.com/. |

## Electrical data

| Ratings per | IEC/EN 60664-1 | | |
|---|---|---|---|
| Overvoltage category | III | III | II |
| Pollution degree | 3 | 2 | 2 |
| Nominal voltage | 80 V | 160 V | 250 V |
| Rated impulse withstand voltage | 2.5 kV | 2.5 kV | 2.5 kV |
| Rated current | 10 A | 10 A | 10 A |

| Approvals per | UL 1059 | | |
|---|---|---|---|
| Use group | B | C | D |
| Rated voltage | 300 V | 50 V | - |
| Rated current | 10 A | 10 A | - |

| Approvals per | CSA | | |
|---|---|---|---|
| Use group | B | C | D |
| Rated voltage | 300 V | - | - |
| Rated current | 10 A | - | - |

## Connection Data

| | |
|---|---|
| Clamping units | 18 |
| Total number of potentials | 18 |
| Number of connection types | 1 |
| Number of levels | 2 |

### Connection 1

| | |
|---|---|
| Connection technology | CAGE CLAMP® |
| Actuation type | Operating tool |
| Actuation direction 1 | Operation perpendicular to conductor entry |
| Solid conductor | 0.08 … 1.5 mm² / 28 … 16 AWG |
| Fine-stranded conductor | 0.08 … 1.5 mm² / 28 … 16 AWG |
| Fine-stranded conductor; with insulated ferrule | 0.25 … 1 mm² |
| Fine-stranded conductor; with uninsulated ferrule | 0.25 … 1 mm² |
| Strip length | 6 … 7 mm / 0.24 … 0.28 inches |
| Pole number | 18 |
| Conductor entry direction to mating direction | 0 ° |

## Physical data

| | |
|---|---|
| Pin spacing | 3.5 mm / 0.138 inches |
| Width | 40.2 mm / 1.583 inches |
| Height | 16.5 mm / 0.65 inches |
| Depth | 43.7 mm / 1.72 inches |


Continued on next page

## Mechanical data

| | |
|---|---|
| Variable coding | Yes |
| Anti-rotation protection | Yes |

## Plug-in connection

| | |
|---|---|
| Contact type (pluggable connector) | Female connector/socket |
| Connector (connection type) | for conductor |
| Mismating protection | Yes |
| Locking of plug-in connection | Locking lever |
| Strain relief | Strain relief plate |

## Material data

| | |
|---|---|
| Note (material data) | Information on material specifications can be found here |
| Color | black |
| Material group | II |
| Insulation material (main housing) | Glass fiber-reinforced polyamide (PA66 GF) |
| Flammability class per UL94 | V0 |
| Clamping spring material | Chrome-nickel spring steel (CrNi) |
| Contact material | Copper alloy |
| Contact Plating | Tin |
| Fire load | 0.121 MJ |
| Weight | 11 g |

## Environmental requirements

| | |
|---|---|
| Limit temperature range | -60 … +100 °C |
| Processing temperature | -35 … +60 °C |

## Commercial data

| | |
|---|---|
| Product Group | 3 (Multi Conn. System) |
| PU (SPU) | 25 pcs |
| Packaging type | Box |
| Country of origin | PL |
| GTIN | 4050821177647 |
| Customs tariff number | 85366990990 |

## Product Classification

| | |
|---|---|
| UNSPSC | 39121409 |
| eCl@ss 10.0 | 27-14-11-06 |
| eCl@ss 9.0 | 27-14-11-06 |
| ETIM 9.0 | EC001284 |
| ETIM 10.0 | EC001284 |
| ECCN | NO US CLASSIFICATION |


Continued on next page

## Environmental Product Compliance

| | |
|---|---|
| RoHS Compliance Status | Compliant,No Exemption |
| SCIP notification number (Austria) | b1b0435d-e597-4497-848f-4eea90bf7dc4 |
| SCIP notification number (Belgium) | 4e7ebaec-0fe2-4550-9dff-477bd3aa2706 |
| SCIP notification number (Bulgaria) | c965fd34-1eb8-4487-acee-d1caf175529b |
| SCIP notification number (Czech Republic) | eea2290d-db23-4fa1-8b6e-e9dc5d483843 |
| SCIP notification number (Denmark) | d3cdae10-5524-4370-b2e0-851127bed1f8 |
| SCIP notification number (Finland) | 16e3596c-db5e-448e-99f7-734d71993700 |
| SCIP notification number (France) | a34d8eab-0c7e-49ff-9bfd-10a9f2030a7f |
| SCIP notification number (Germany) | a76b13cf-126c-419c-8545-e2fd80725a01 |
| SCIP notification number (Hungary) | 02a15dc6-3d43-4208-a68e-c056c4fbca1d |
| SCIP notification number (Italy) | e87c4219-8f5a-4aba-bec1-5cef97cc4d02 |
| SCIP notification number (Netherlands) | 2c21d8ad-5537-4023-b79d-545265ae9a68 |
| SCIP notification number (Poland) | 5b196b33-be49-43a9-bafc-69bbbf12b78c |
| SCIP notification number (Romania) | ec49794c-415a-4ebe-9690-7f488ec22e6b |
| SCIP notification number (Sweden) | d4ab1bbd-831d-4a5f-afd0-30586b084e69 |

## Approvals / Certificates

### General approvals

| Approval | Standard | Certificate Name |
|---|---|---|
| CB<br>DEKRA Certification B.V. | IEC 61984 | NL-102427 |
| CSA<br>CSA Group | C22.2 | 2315087 |
| KEMA/KEUR<br>DEKRA Certification B.V. | EN 61984 | 71-133740 |

### Declarations of conformity and manufacturer's declarations

| Approval | Standard | Certificate Name |
|---|---|---|
| Railway<br>WAGO GmbH & Co. KG | - | Z00004422.000 |

## Downloads

### Environmental Product Compliance

**Compliance Search**

### Documentation

**Additional Information**

| | | |
|---|---|---|
| Technical Section | 03.04.2019 | pdf<br>2027.26 KB |


Continued on next page

# 1 Compatible Products

## 1.1 System counterpart

### 1.1.1 Male connector/plug



Item No.: 713-1429/116-000/997-407
THR male header, 2-row; 0.8 x 0.8 mm solder pin; angled; 100% protected against mismating; Levers; in tape-and-reel packaging; Pin spacing 3.5 mm; 18-pole; black



Item No.: 713-1429/116-000
THR male header, 2-row; 0.8 x 0.8 mm solder pin; angled; 100% protected against mismating; Levers; Pin spacing 3.5 mm; 18-pole; black



Item No.: 713-1409/116-000/997-407
THR male header, 2-row; 0.8 x 0.8 mm solder pin; straight; 100% protected against mismating; Levers; in tape-and-reel packaging; Pin spacing 3.5 mm; 18-pole; black



Item No.: 713-1409/116-000
THR male header, 2-row; 0.8 x 0.8 mm solder pin; straight; 100% protected against mismating; Levers; Pin spacing 3.5 mm; 18-pole; black



Item No.: 713-1429/037-000
THT male header, 2-row; 0.8 x 0.8 mm solder pin; angled; 100% protected against mismating; Levers; Pin spacing 3.5 mm; 18-pole; black



Item No.: 713-1409/037-000
THT male header, 2-row; 0.8 x 0.8 mm solder pin; straight; 100% protected against mismating; Levers; Pin spacing 3.5 mm; 18-pole; black

## 1.2 Optional Accessories

### 1.2.1 Ferrule

#### 1.2.1.1 Ferrule



Item No.: 216-321
Ferrule; Sleeve for 0.25 mm² / AWG 24; insulated; electro-tin plated; yellow



Item No.: 216-131
Ferrule; Sleeve for 0.25 mm² / AWG 24; uninsulated; electro-tin plated; silver-colored



Item No.: 216-322
Ferrule; Sleeve for 0.34 mm² / 22 AWG; insulated; electro-tin plated; light turquoise



Item No.: 216-132
Ferrule; Sleeve for 0.34 mm² / 22 AWG; uninsulated; electro-tin plated



Item No.: 216-221
Ferrule; Sleeve for 0.5 mm² / 20 AWG; insulated; electro-tin plated; white



Item No.: 216-121
Ferrule; Sleeve for 0.5 mm² / AWG 22; uninsulated; electro-tin plated; silver-colored



Item No.: 216-222
Ferrule; Sleeve for 0.75 mm² / 18 AWG; insulated; electro-tin plated; gray



Item No.: 216-122
Ferrule; Sleeve for 0.75 mm² / 18 AWG; uninsulated; electro-tin plated; silver-colored



Item No.: 216-223
Ferrule; Sleeve for 1 mm² / AWG 18; insulated; electro-tin plated; red



Item No.: 216-123
Ferrule; Sleeve for 1 mm² / AWG 18; uninsulated; electro-tin plated; silver-colored

### 1.2.2 Stickers with operating instructions

#### 1.2.2.1 Stickers with operating instructions



Item No.: 210-493
Stickers for operating instructions


Continued on next page

### 1.2.3 Strain relief

#### 1.2.3.1 Strain relief plate



Item No.: 713-127
Strain relief plate; for female connectors; 25 mm wide; 1 part; Pin spacing 3.5 mm; black

### 1.2.4 Tool

#### 1.2.4.1 Operating tool



Item No.: 210-719
Operating tool; Blade: 2.5 x 0.4 mm; with a partially insulated shaft



Item No.: 210-647
Operating tool; Blade: 2.5 x 0.4 mm; with a partially insulated shaft; multicoloured

## Installation Notes

### Conductor termination

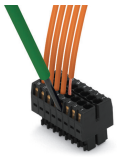

Inserting a conductor via (2.5 x 0.4) mm screwdriver.

### Locking system

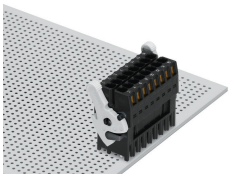

Lever as a lock – when closed, female connector is locked.

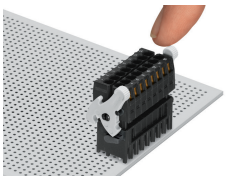

Lever as a disconnection aid – when opened, female connector is disconnected. Rotating the lever lifts the female connector out of the male header.

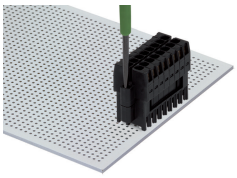

Screw interlock can only be disconnected using a tool.

### Coding

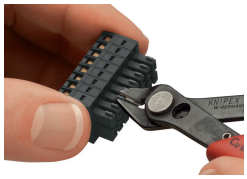

Coding a female connector by removing coding finger(s).


Continued on next page

## Strain relief



Strain relief plate for field assembly

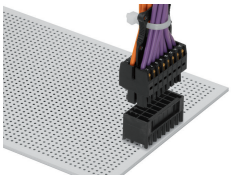

Centered strain relief plate anchors conductors for easy disconnection.