Data Sheet | Item Number: 721-302/031-000

1-conductor female connector, angled; CAGE CLAMP®; 2.5 mm²; Pin spacing 5 mm; 2-pole; 100% protected against mismating; clamping collar; 2,50 mm²; light gray

https://www.wago.com/721-302/031-000

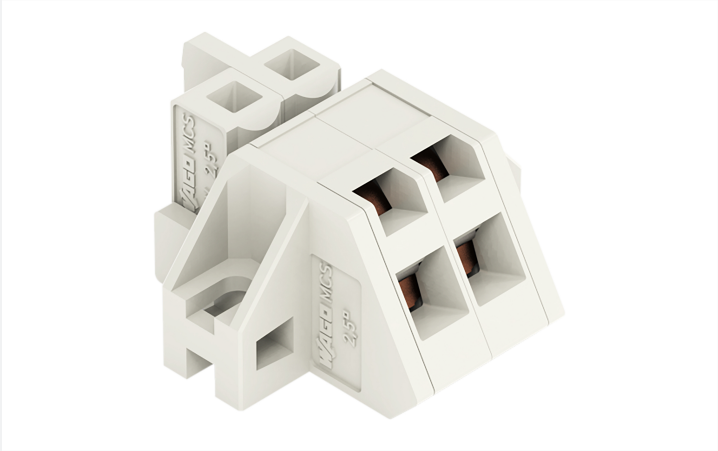

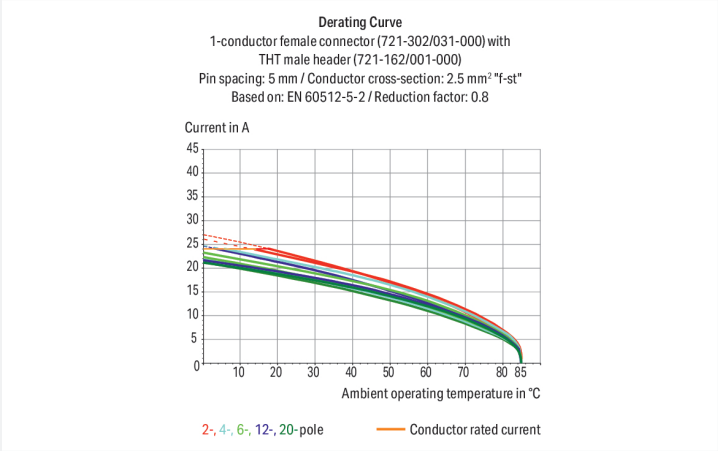

Color: light gray

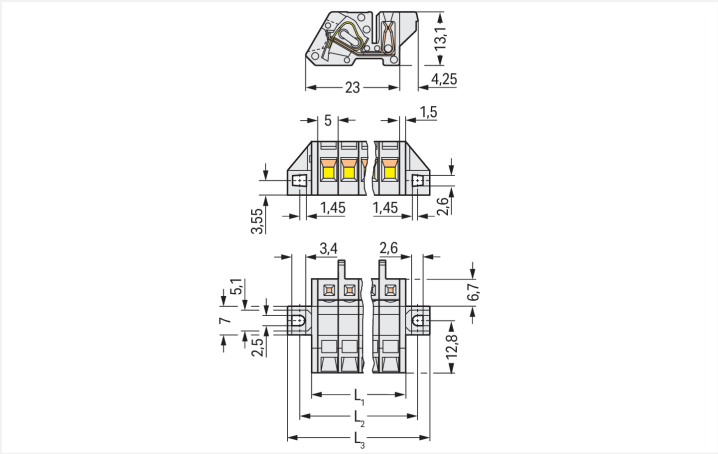

Dimensions in mm
L1 = (pole no. x pin spacing) + 3 mmL2 = (pole no. x pin spacing) + 8.8 mmL3 = (pole no. x pin spacing) + 14.8 mm

Female connector, 721 Series, operating tool

This female connector (item number 721-302/031-000) simplifies electrical installations. Ensure that the strip lengths are between 7 and 8 mm when connecting conductors to this female connector. Featuring one conductor terminal along with CAGE CLAMP®, this connector delivers reliable performance. Our reliable and maintenance-free CAGE CLAMP® connection makes it easy to connect all types of conductors without having to prepare the conductor. For example, you don't need to crimp ferrules. The dimensions are (21.8 x 13.1 x 27.25) mm (width x height x depth). This female connector is suitable for conductor cross sections ranging from 0.08 mm² to 2.5 mm².

The contact surface is coated with tin.

Notes

Safety Information	The *MCS – MULTI CONNECTION SYSTEM* includes connectors without breaking capacity in accordance with DIN EN 61984. When used as intended, these connectors must not be connected/disconnected when live or under load.When used as intended, these connectors must not be connected/disconnected when live or under load. The circuit design should ensure header pins, which can be touched, are not live when unmated.
Variants:	Other pole numbers Gold-plated or partially gold-plated contact surfaces Other versions (or variants) can be requested from WAGO Sales or configured at https://configurator.wago.com/.

Electrical data

Ratings per	IEC/EN 60664-1		
Overvoltage category	III	III	II
Pollution degree	3	2	2
Nominal voltage	320 V	320 V	630 V
Rated impulse withstand voltage	4 kV	4 kV	4 kV
Rated current	12 A	12 A	12 A

Approvals per	UL 1059		
Use group	B	C	D
Rated voltage	300 V	-	300 V
Rated current	15 A	-	10 A

Approvals per	UL 1977
Rated voltage	600 V
Rated current	15 A

Approvals per	CSA		
Use group	B	C	D
Rated voltage	300 V	-	300 V
Rated current	15 A	-	10 A

Connection Data

Clamping units	2
Total number of potentials	2
Number of connection types	1
Number of levels	1

Connection 1

Connection technology	CAGE CLAMP®
Actuation type	Operating tool
Actuation direction 1	Operation parallel to conductor entry
Solid conductor	0.08 … 2.5 mm² / 28 … 12 AWG
Fine-stranded conductor	0.08 … 2.5 mm² / 28 … 12 AWG
Fine-stranded conductor; with insulated ferrule	0.25 … 1.5 mm²
Fine-stranded conductor; with uninsulated ferrule	0.25 … 2.5 mm²
Strip length	7 … 8 mm / 0.28 … 0.31 inches
Pole number	2
Conductor entry direction to mating direction	90 °

Physical data

Pin spacing	5 mm / 0.197 inches
Width	21.8 mm / 0.858 inches
Height	13.1 mm / 0.516 inches
Depth	27.25 mm / 1.073 inches

Continued on next page

Mechanical data

Variable coding	No
Housing sheet thickness	0.6 … 1.2 mm / 0.024 … 0.047 inches
Design	angled; mountable
Mounting type	Mounting flange
Mounting type	Panel mounting
Anti-rotation protection	Yes

Plug-in connection

Contact type (pluggable connector)	Female connector/socket
Connector (connection type)	for conductor
Mismating protection	Yes

Material data

Note (material data)	Information on material specifications can be found here
Color	light gray
Material group	I
Insulation material (main housing)	Polyamide (PA66)
Flammability class per UL94	V0
Clamping spring material	Chrome-nickel spring steel (CrNi)
Contact material	Copper alloy
Contact Plating	Tin
Fire load	0.09 MJ
Weight	3.9 g

Environmental requirements

Limit temperature range	-60 … +85 °C
Processing temperature	-35 … +60 °C

Commercial data

Product Group	3 (Multi Conn. System)
PU (SPU)	100 pcs
Packaging type	Box
Country of origin	PL
GTIN	4044918573870
Customs tariff number	85366990990

Product Classification

UNSPSC	39121409
eCl@ss 10.0	27-44-03-09
eCl@ss 9.0	27-44-03-09
ETIM 9.0	EC002638
ETIM 10.0	EC002638
ECCN	NO US CLASSIFICATION

Continued on next page

Environmental Product Compliance

RoHS Compliance Status	Compliant,No Exemption

Approvals / Certificates

General approvals

Approval	Standard	Certificate Name
CB DEKRA Certification B.V.	IEC 61984	NL-113351
CSA DEKRA Certification B.V.	C22.2	1466354
KEMA/KEUR DEKRA Certification B.V.	EN 61984	71-130478 REV.1
UL Underwriters Laboratories Inc.	UL 1059	UL-US-L45172-6187117-81111991-4
UR Underwriters Laboratories Inc.	UL 1977	E45171

Approvals for marine applications

Approval	Standard	Certificate Name
ABS American Bureau of Shipping	-	24-0095975-PDA
BV Bureau Veritas S.A.	IEC 60998	11915/E0 BV
DNV DNV GL SE	-	TAE000016Z
PRS Polski Rejestr Statków	-	TE/1095/880590/23

Downloads

Environmental Product Compliance

Compliance Search

Environmental Product Compliance
721-302/031-000

Documentation

Additional Information

Technical Section	03.04.2019	pdf 2027.26 KB

CAD/CAE-Data

CAD data

2D/3D Models
721-302/031-000

CAE data

EPLAN Data Portal
721-302/031-000

ZUKEN Portal
721-302/031-000

Continued on next page

1 Compatible Products

1.1 System counterpart

1.1.1 Male connector/plug



Item No.: 721-602
1-conductor male connector; CAGE CLAMP®; 2.5 mm²; Pin spacing 5 mm; 2-pole; 100% protected against mismating; 2,50 mm²; light gray



Item No.: 2721-1602
1-conductor male connector; lever; Push-in CAGE CLAMP®; 2.5 mm²; Pin spacing 5 mm; 2-pole; 100% protected against mismating; 2,50 mm²; light gray



Item No.: 2721-1602/000-044
1-conductor male connector; lever; Push-in CAGE CLAMP®; 2.5 mm²; Pin spacing 5 mm; 2-pole; 100% protected against mismating; direct marking; 2,50 mm²; light gray



Item No.: 2721-1602/000-9034
1-conductor male connector; lever; Push-in CAGE CLAMP®; 2.5 mm²; Pin spacing 5 mm; 2-pole; 100% protected against mismating; direct marking; 2,50 mm²; light gray



Item No.: 2721-1602/332-000
1-conductor male connector; lever; Push-in CAGE CLAMP®; 2.5 mm²; Pin spacing 5 mm; 2-pole; 100% protected against mismating; Strain relief plate; 2,50 mm²; light gray



Item No.: 721-132/001-000
THT male header; 1.0 x 1.0 mm solder pin; straight; 100% protected against mismating; Pin spacing 5 mm; 2-pole; light gray

1.2 Optional Accessories

1.2.1 Cover

1.2.1.1 Cover



Item No.: 231-668
Lockout caps; for covering unused clamping units; gray

1.2.2 Ferrule

1.2.2.1 Ferrule

Item No.: 216-131
Ferrule; Sleeve for 0.25 mm² / AWG 24; uninsulated; electro-tin plated; silver-colored

Item No.: 216-132
Ferrule; Sleeve for 0.34 mm² / 22 AWG; uninsulated; electro-tin plated

1.2.3 Jumper

1.2.3.1 Jumper



Item No.: 231-910
Jumper; for conductor entry; 10-way; insulated; gray



Item No.: 231-902
Jumper; for conductor entry; 2-way; insulated; gray



Item No.: 231-903
Jumper; for conductor entry; 3-way; insulated; gray



Item No.: 231-905
Jumper; for conductor entry; 5-way; insulated; gray



Item No.: 231-907
Jumper; for conductor entry; 7-way; insulated; gray

Continued on next page

1.2.4 Marking

1.2.4.1 Marking strip



Item No.: 210-332/500-202
Marking strips; as a DIN A4 sheet; MARKED; 1-16 (160x); Height of marker strip: 3 mm; Strip length 182 mm; Horizontal marking; Self-adhesive; white



Item No.: 210-332/500-205
Marking strips; as a DIN A4 sheet; MARKED; 1-32 (80x); Height of marker strip: 3 mm; Strip length 182 mm; Horizontal marking; Self-adhesive; white



Item No.: 210-332/500-204
Marking strips; as a DIN A4 sheet; MARKED; 17-32 (160x); Height of marker strip: 3 mm; Strip length 182 mm; Horizontal marking; Self-adhesive; white



Item No.: 210-332/500-206
Marking strips; as a DIN A4 sheet; MARKED; 33-48 (160x); Height of marker strip: 3 mm; Strip length 182 mm; Horizontal marking; Self-adhesive; white

1.2.5 Strain relief

1.2.5.1 Strain relief housing



Item No.: 232-602
Strain relief housing; for female and male connectors; 2 parts; Pin spacing 5 mm; 2-pole; gray

1.2.6 Test and measurement

1.2.6.1 Testing accessories



Item No.: 210-136
Test plug; 2 mm Ø; with 500 mm cable; red



Item No.: 231-661
Test plugs for female connectors; for 5 mm and 5.08 mm pin spacing; 2,50 mm²; light gray

1.2.7 Tool

1.2.7.1 Operating tool



Item No.: 280-440
Operating tool; made of insulating material; 10-way; white



Item No.: 209-130
Operating tool; made of insulating material; 1-way; for 264 Series (1-/2-way), 280, 281 Series (up to 3-way); natural



Item No.: 231-291
Operating tool; made of insulating material; 1-way; loose; red



Item No.: 231-131
Operating tool; made of insulating material; 1-way; loose; white



Item No.: 280-432
Operating tool; made of insulating material; 2-way; white



Item No.: 280-433
Operating tool; made of insulating material; 3-way; white



Item No.: 280-434
Operating tool; made of insulating material; 4-way; white

Item No.: 280-435
Operating tool; made of insulating material; 5-way; gray



Item No.: 280-436
Operating tool; made of insulating material; 6-way; white



Item No.: 280-437
Operating tool; made of insulating material; 7-way; white



Item No.: 280-438
Operating tool; made of insulating material; 8-way; white

Installation Notes

Application

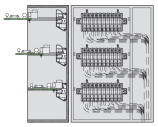

Multilevel arrangement in a distributed electronic housing

Application



Angled female connector –
a male header with straight solder pins is used for horizontal PCB mounting in narrow housings.