Data Sheet | Item Number: 721-862/001-000

THT male header; 1.2 x 1.2 mm solder pin; angled; 100% protected against mismating; Pin spacing 7.5 mm; 2-pole; light gray

https://www.wago.com/721-862/001-000

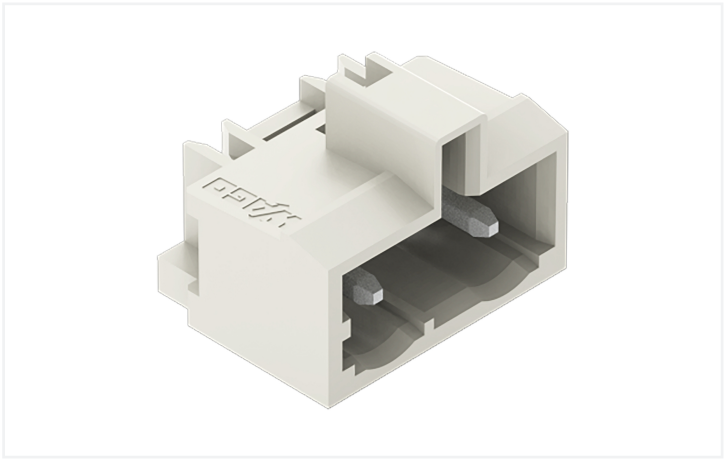

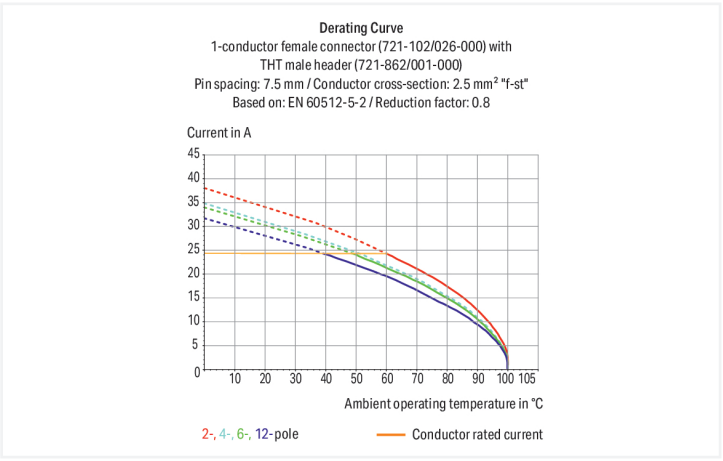

Color: light gray

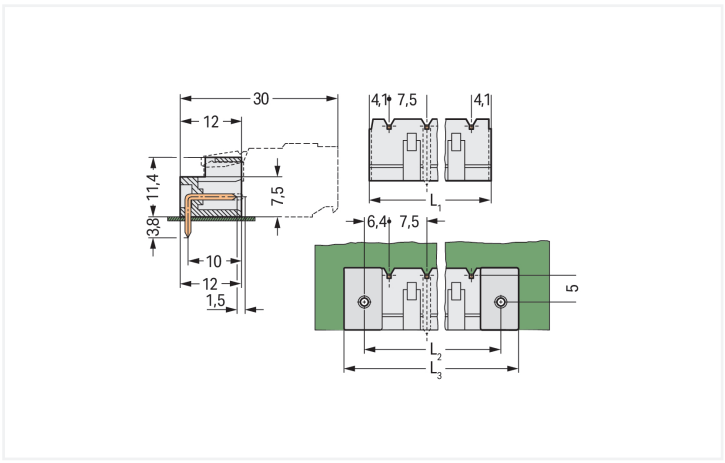

Dimensions in mm
L1 = (pole no. – 1) x pin spacing + 8.2 mmL2 = L1 + 5 mmL3 = L2 + 7.4 mm

Male connector, 721 Series, with 7.5 mm pin spacing

Enjoy seamless electrical installations with this male connector (item number 721-862/001-000). The dimensions are (15.7 x 15.2 x 12) mm (width x height x depth).

The contact surface is coated with tin. THT is used to assemble the pcb connector.

Notes

Safety Information	The *MCS – MULTI CONNECTION SYSTEM* includes connectors without breaking capacity in accordance with DIN EN 61984. When used as intended, these connectors must not be connected/disconnected when live or under load.When used as intended, these connectors must not be connected/disconnected when live or under load. The circuit design should ensure header pins, which can be touched, are not live when unmated.
Variants:	Other pole numbers 3.8 mm pin projection for male headers with straight solder pins Gold-plated or partially gold-plated contact surfaces Other versions (or variants) can be requested from WAGO Sales or configured at https://configurator.wago.com/.

Electrical data

Ratings per	IEC/EN 60664-1		
Overvoltage category	III	III	II
Pollution degree	3	2	2
Nominal voltage	500 V	630 V	1000 V
Rated impulse withstand voltage	6 kV	6 kV	6 kV
Rated current	16 A	16 A	16 A

Approvals per	UL 1059		
Use group	B	C	D
Rated voltage	300 V	-	300 V
Rated current	15 A	-	10 A

Approvals per	UL 1977
Rated voltage	600 V
Rated current	15 A

Approvals per	CSA		
Use group	B	C	D
Rated voltage	300 V	-	300 V
Rated current	15 A	-	10 A

Connection Data

Total number of potentials	2
Number of connection types	1
Number of levels	1

Connection 1

Pole number	2

Physical data

Pin spacing	7.5 mm / 0.295 inches
Width	15.7 mm / 0.618 inches
Height	15.2 mm / 0.598 inches
Height from the surface	11.4 mm / 0.449 inches
Depth	12 mm / 0.472 inches
Solder pin length	3.8 mm
Solder pin dimensions	1.2 x 1.2 mm
Drilled hole diameter	$1.7^{(+0.1)}$ mm

Mechanical data

Variable coding	Yes
Anti-rotation protection	Yes

Continued on next page

Plug-in connection

Contact type (pluggable connector)	Male connector/plug
Connector (connection type)	for PCB
Mismating protection	Yes
Mating direction to the PCB	0 °

PCB contact

PCB contact	THT
Solder pin arrangement	over the entire male connector (in-line)
Number of solder pins per potential	1

Material data

Note (material data)	Information on material specifications can be found here
Color	light gray
Material group	I
Insulation material (main housing)	Polyamide (PA66)
Flammability class per UL94	V0
Contact material	Electrolytic copper (E_{Cu})
Contact Plating	Tin
Fire load	0.017 MJ
Weight	1 g

Environmental requirements

Limit temperature range	-60 … +100 °C
Processing temperature	-35 … +60 °C

Environmental Testing

Test specification: Railway applications – Rolling stock – Electronic equipment	DIN EN 50155 (VDE 0115-200):2022-06
Test procedure: Railway applications – Rolling stock equipment – Vibration and shock tests	DIN EN 61373 (VDE 0115-0106):2011-04
Spectrum/Mounting location	Service life test, Category 1, Class A/B
Functional test with noise-like oscillations	Test passed according to Section 8 of the standard
Frequency	f_1 = 5 Hz to f_2 = 150 Hz
Acceleration	0.101g (highest test level used for all axes)
Test duration per axis	10 min.
Test directions	X, Y and Z axes
Monitoring of contact faults and interruptions	Passed
Voltage drop measurement before and after each axis	Passed
Simulated service life test through increased levels of noise-like oscillations	Test passed according to Section 9 of the standard
Frequency	f_1 = 5 Hz to f_2 = 150 Hz
Acceleration	0.572g (highest test level used for all axes)
Test duration per axis	5 h
Test directions	X, Y and Z axes
Extended testing: Monitoring of contact faults and interruptions	Passed
Extended testing: Voltage drop measurement before and after each axis	Passed
Shock test	Test passed according to Section 10 of the standard
Shock pulse form	Half sine
Acceleration	5g (highest test level used for all axes)

Continued on next page

Environmental Testing

Shock duration	30 ms
Number of shocks (per axis)	3 pos. und 3 neg.
Test directions	X, Y and Z axes
Extended testing: Monitoring of contact faults and interruptions	Passed
Extended testing: Voltage drop measurement before and after each axis	Passed
Vibration and shock stress for rolling stock equipment	Passed

Commercial data

Product Group	3 (Multi Conn. System)
PU (SPU)	200 pcs
Packaging type	Box
Country of origin	PL
GTIN	4044918933391
Customs tariff number	85366930000

Product Classification

UNSPSC	39121409
eCl@ss 10.0	27-44-04-02
eCl@ss 9.0	27-44-04-02
ETIM 9.0	EC002637
ETIM 10.0	EC002637
ECCN	NO US CLASSIFICATION

Environmental Product Compliance

RoHS Compliance Status	Compliant,No Exemption

Approvals / Certificates

General approvals

Approval	Standard	Certificate Name
CB DEKRA Certification B.V.	IEC 61984	NL-113351
CSA DEKRA Certification B.V.	C22.2	1466354
KEMA/KEUR DEKRA Certification B.V.	EN 61984	71-130478 REV.1
UL Underwriters Laboratories Inc.	UL 1059	E45172
UR Underwriters Laboratories Inc.	UL 1977	E 45171

Declarations of conformity and manufacturer's declarations

Approval	Standard	Certificate Name
Railway WAGO GmbH & Co. KG	-	Railway Ready

Continued on next page

Approvals for marine applications




Approval	Standard	Certificate Name
ABS American Bureau of Shipping	-	24-0095975-PDA
BV Bureau Veritas S.A.	IEC 60998	11915/E0 BV

Downloads

Environmental Product Compliance

Compliance Search

Environmental Product Compliance
721-862/001-000

Documentation

Additional Information

Technical Section	03.04.2019	pdf 2027.26 KB

CAD/CAE-Data

CAD data

2D/3D Models
721-862/001-000

CAE data

EPLAN Data Portal
721-862/001-000

ZUKEN Portal
721-862/001-000

PCB Design

Symbol and Footprint via SamacSys
721-862/001-000

Symbol and Footprint via Ultra Librarian
721-862/001-000

Continued on next page

1 Compatible Products

1.1 System counterpart

1.1.1 Female connector/socket



Item No.: 721-202/026-000
1-conductor female connector; CAGE CLAMP®; 2.5 mm²; Pin spacing 7.5 mm; 2-pole; 100% protected against mismating; 2,50 mm²; light gray



Item No.: 2722-1202/326-000
1-conductor female connector; lever; Push-in CAGE CLAMP®; 2.5 mm²; Pin spacing 7.5 mm; 2-pole; 100% protected against mismating, coding finger; 2,50 mm²; light gray



Item No.: 2722-1202/037-000
1-conductor female connector; lever; Push-in CAGE CLAMP®; 2.5 mm²; Pin spacing 7.5 mm; 2-pole; 100% protected against mismating, coding finger; Lateral locking levers; 2,50 mm²; light gray



Item No.: 2722-1202/037-000/332-000
1-conductor female connector; lever; Push-in CAGE CLAMP®; 2.5 mm²; Pin spacing 7.5 mm; 2-pole; Lateral locking levers; Strain relief plate; 2,50 mm²; light gray



Item No.: 2722-1202/326-000/332-000
1-conductor female connector; lever; Push-in CAGE CLAMP®; 2.5 mm²; Pin spacing 7.5 mm; 2-pole; Strain relief plate; 2,50 mm²; light gray

1.2 Optional Accessories

1.2.1 Coding

1.2.1.1 Coding



Item No.: 231-130
Coding key; snap-on type; light gray

1.2.2 Marking

1.2.2.1 Marking strip



Item No.: 210-833
Marking strips; 25 m on roll; 6 mm wide; plain; Self-adhesive; white



Item No.: 210-834
Marking strips; on reel; 5 mm wide; plain; Self-adhesive; white

Installation Notes

Coding

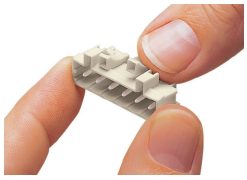

Coding a male header – fitting coding key(s).