Data Sheet | Item Number: 722-242/047-000

THT female header; angled; Pin spacing 5 mm; 12-pole; 100% protected against mismating; Spacer flange; 0.6 x 1.0 mm solder pin; light gray

https://www.wago.com/722-242/047-000

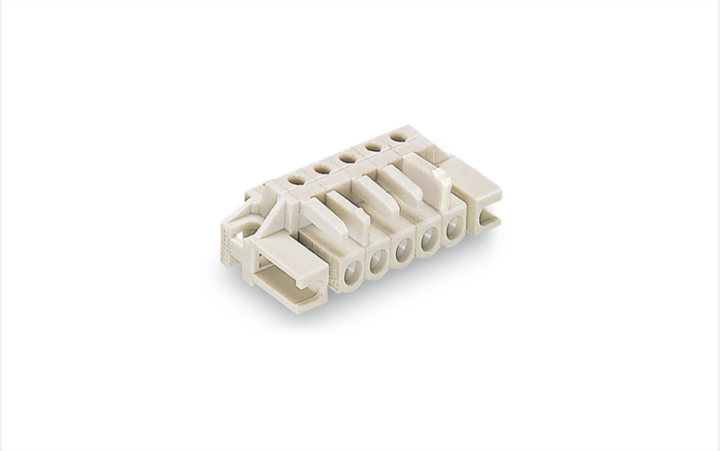

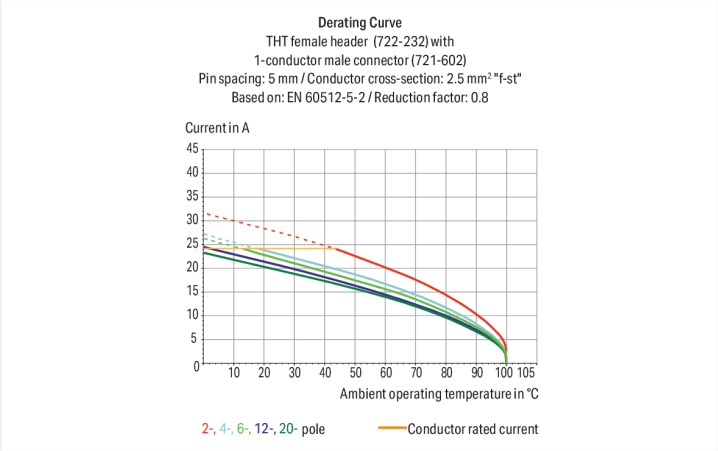

Color: light gray

Similar to illustration

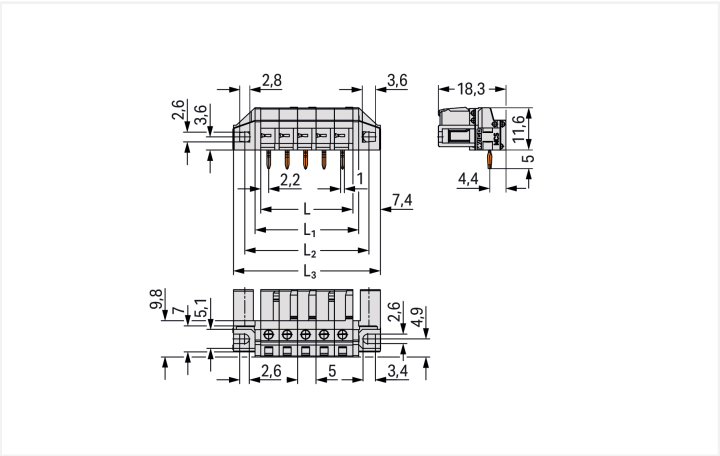

Dimensions in mm
L = pole no. x pin spacingL1 = L + 3 mmL2 = L + 8.8 mmL3 = L + 14.8 mm2-pole female connectors – one latch only

Female connector, 722 Series, light gray

Error-free electrical installations are guaranteed with this female connector (item number 722-242/047-000). Dimensions: (74.8 x 16.6 x 18.25) mm (width x height x depth).

Tin is used for coating the contact surfaces. The pcb connector is designed for THT soldering.

Notes

Safety Information	The *MCS – MULTI CONNECTION SYSTEM* includes connectors without breaking capacity in accordance with DIN EN 61984. When used as intended, these connectors must not be connected/disconnected when live or under load.When used as intended, these connectors must not be connected/disconnected when live or under load. The circuit design should ensure header pins, which can be touched, are not live when unmated.
Variants:	Other pole numbers 3.8 mm pin projection for male headers with straight solder pins Gold-plated or partially gold-plated contact surfaces Other versions (or variants) can be requested from WAGO Sales or configured at https://configurator.wago.com/.

Electrical data

Ratings per	IEC/EN 60664-1		
Overvoltage category	III	III	II
Pollution degree	3	2	2
Nominal voltage	320 V	320 V	630 V
Rated impulse withstand voltage	4 kV	4 kV	4 kV
Rated current	12 A	12 A	12 A

Approvals per	UL 1059		
Use group	B	C	D
Rated voltage	300 V	-	300 V
Rated current	16 A	-	10 A

Ratings	
Approvals per	UL 1977
Rated voltage	600 V
Rated current	15 A

Approvals per	CSA		
Use group	B	C	D
Rated voltage	300 V	-	300 V
Rated current	15 A	-	10 A

Connection Data

Clamping units	12
Total number of potentials	12
Number of connection types	1
Number of levels	1

Connection 1

Pole number	12

Physical data

Pin spacing	5 mm / 0.197 inches
Width	74.8 mm / 2.945 inches
Height	16.6 mm / 0.654 inches
Height from the surface	11.6 mm / 0.457 inches
Depth	18.25 mm / 0.719 inches
Solder pin length	5 mm
Solder pin dimensions	0.6 x 1 mm
Drilled hole diameter	1.3 $^{(+0.1)}$ mm

Mechanical data

Variable coding	Yes
Mounting type	Mounting flange
Mounting type	Flush feed-through mounting Panel mounting
Anti-rotation protection	Yes
Suitable for through-panel applications	Yes

Continued on next page

Plug-in connection

Contact type (pluggable connector)	Female connector/socket
Connector (connection type)	for PCB
Mismating protection	Yes
Mating direction to the PCB	0 °

PCB contact

PCB contact	THT
Solder pin arrangement	over the entire female connector (in-line)
Number of solder pins per potential	1

Material data

Note (material data)	Information on material specifications can be found here
Color	light gray
Material group	I
Insulation material (main housing)	Polyamide (PA66)
Flammability class per UL94	V0
Contact material	Copper alloy
Contact Plating	Tin
Fire load	0.196 MJ
Weight	12 g

Environmental requirements

Limit temperature range	-60 … +100 °C
Processing temperature	-35 … +60 °C

Environmental Testing

Test specification: Railway applications – Rolling stock – Electronic equipment	DIN EN 50155 (VDE 0115-200):2022-06
Test procedure: Railway applications – Rolling stock equipment – Vibration and shock tests	DIN EN 61373 (VDE 0115-0106):2011-04
Spectrum/Mounting location	Service life test, Category 1, Class A/B
Functional test with noise-like oscillations	Test passed according to Section 8 of the standard
Frequency	f_1 = 5 Hz to f_2 = 150 Hz
Acceleration	0.101g (highest test level used for all axes)
Test duration per axis	10 min.
Test directions	X, Y and Z axes
Monitoring of contact faults and interruptions	Passed
Voltage drop measurement before and after each axis	Passed
Simulated service life test through increased levels of noise-like oscillations	Test passed according to Section 9 of the standard
Frequency	f_1 = 5 Hz to f_2 = 150 Hz
Acceleration	0.572g (highest test level used for all axes)
Test duration per axis	5 h
Test directions	X, Y and Z axes
Extended testing: Monitoring of contact faults and interruptions	Passed
Extended testing: Voltage drop measurement before and after each axis	Passed
Shock test	Test passed according to Section 10 of the standard
Shock pulse form	Half sine
Acceleration	5g (highest test level used for all axes)

Continued on next page

Environmental Testing

Shock duration	30 ms
Number of shocks (per axis)	3 pos. und 3 neg.
Test directions	X, Y and Z axes
Extended testing: Monitoring of contact faults and interruptions	Passed
Extended testing: Voltage drop measurement before and after each axis	Passed
Vibration and shock stress for rolling stock equipment	Passed

Commercial data

Product Group	3 (Multi Conn. System)
PU (SPU)	25 pcs
Packaging type	Box
Country of origin	DE
GTIN	4044918534475
Customs tariff number	85366990990

Product Classification

UNSPSC	39121409
eCl@ss 10.0	27-44-04-02
eCl@ss 9.0	27-44-04-02
ETIM 9.0	EC002637
ETIM 10.0	EC002637
ECCN	NO US CLASSIFICATION

Environmental Product Compliance

RoHS Compliance Status	Compliant,No Exemption

Approvals / Certificates

General approvals

Approval	Standard	Certificate Name
CSA DEKRA Certification B.V.	C22.2	1466354
UL Underwriters Laboratories Inc.	UL 1059	UL-US-L45172-6187117-81111991-4

Declarations of conformity and manufacturer's declarations

Approval	Standard	Certificate Name
Railway WAGO GmbH & Co. KG	-	Railway Ready

Continued on next page

Downloads

Environmental Product Compliance

Compliance Search

Environmental Product Compliance
722-242/047-000

Documentation

Additional Information

Technical Section	03.04.2019	pdf 2027.26 KB

CAD/CAE-Data

CAE data

EPLAN Data Portal
722-242/047-000

PCB Design

Symbol and Footprint via SamacSys
722-242/047-000

Symbol and Footprint via Ultra Librarian
722-242/047-000

1 Compatible Products

1.1 System counterpart

1.1.1 Male connector/plug



Item No.: 721-612
1-conductor male connector; CAGE CLAMP®; 2.5 mm²; Pin spacing 5 mm; 12-pole; 100% protected against mismating; 2,50 mm²; light gray

1.2 Optional Accessories

1.2.1 Installation

1.2.1.1 Mounting accessories



Item No.: 231-295
Screw with nut



Item No.: 231-195
Screw with nut; M2x12; for fixing element



Item No.: 209-147
Self-tapping screw



Item No.: 231-194
Self-tapping screw; B 2.2x13, fixing hole 1.8 mm Ø

Continued on next page

1.2.2 Test and measurement

1.2.2.1 Testing accessories



Item No.: 210-136
Test plug; 2 mm Ø; with 500 mm cable; red



Item No.: 231-661
Test plugs for female connectors; for 5 mm and 5.08 mm pin spacing; 2,50 mm²; light gray