Data Sheet | Item Number: 731-609/019-000

1-conductor male connector; CAGE CLAMP®; 2.5 mm²; Pin spacing 7.5 mm; 9-pole; clamping collar; 2,50 mm²; gray

https://www.wago.com/731-609/019-000

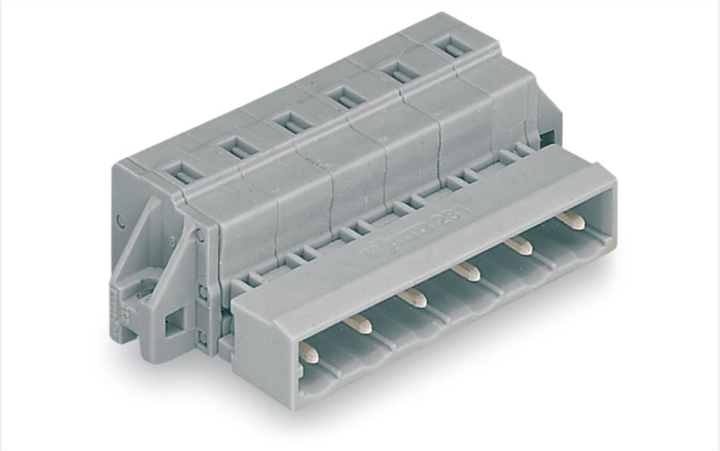

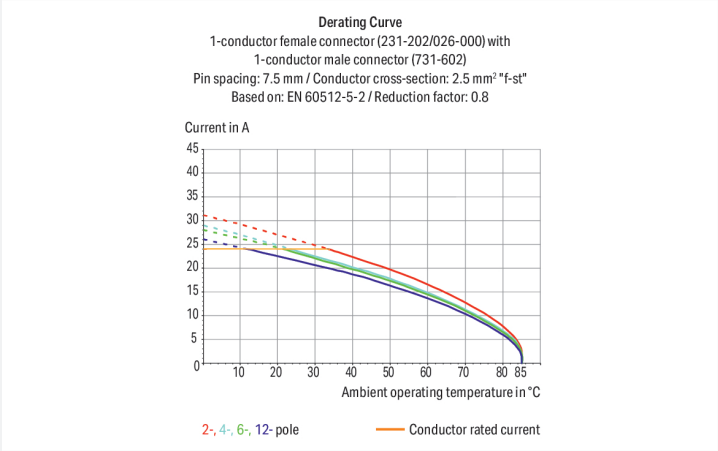

Color: gray

Similar to illustration

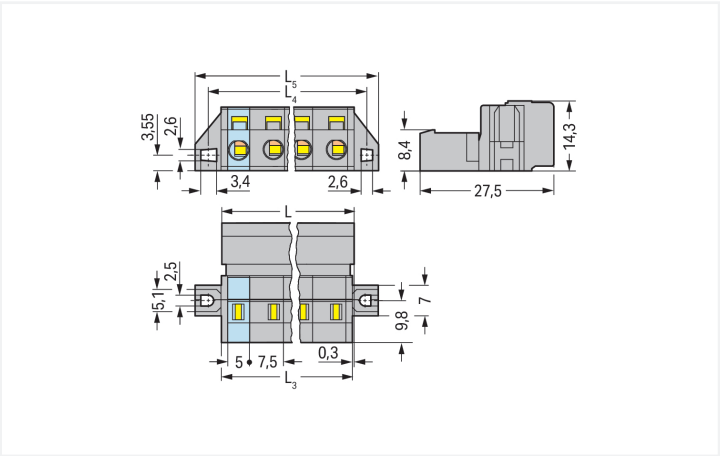

Dimensions in mm
L = (pole no. – 1) x pin spacing + 8.2 mmL3 = L – 0.2 mmL4 = L3 + 5.8 mmL5 = L3 + 11.8 mm

Male connector, 731 Series, 0 ° conductor exit to connection direction

Our male connector (item number 731-609/019-000) simplifies electrical installations. Strip lengths must be between 8 and 9 mm when connecting conductors to this male connector. This product features one conductor terminal and utilizes CAGE CLAMP®. Our CAGE CLAMP® connection offers a secure and maintenance-free way to connect all types of conductors. You do not need to prepare the conductor in any way, such as crimping ferrules. Dimensions: (79.8 x 14.3 x 27.5) mm (width x height x depth). Depending on the conductor type, this male connector is designed for conductor cross sections ranging from 0.08 mm² to 2.5 mm².

The contact surface is coated with tin.

Notes

Safety Information	The *MCS – MULTI CONNECTION SYSTEM* includes connectors without breaking capacity in accordance with DIN EN 61984. When used as intended, these connectors must not be connected/disconnected when live or under load.When used as intended, these connectors must not be connected/disconnected when live or under load. The circuit design should ensure header pins, which can be touched, are not live when unmated.
Variants:	Other pole numbers Gold-plated or partially gold-plated contact surfaces Other versions (or variants) can be requested from WAGO Sales or configured at https://configurator.wago.com/.

Electrical data

Ratings per	IEC/EN 60664-1		
Overvoltage category	III	III	II
Pollution degree	3	2	2
Nominal voltage	500 V	630 V	1000 V
Rated impulse withstand voltage	6 kV	6 kV	6 kV
Rated current	12 A	12 A	12 A

Approvals per	UL 1059		
Use group	B	C	D
Rated voltage	300 V	-	300 V
Rated current	15 A	-	10 A

Approvals per	UL 1977
Rated voltage	600 V
Rated current	15 A

Approvals per	CSA		
Use group	B	C	D
Rated voltage	300 V	-	300 V
Rated current	15 A	-	10 A

Connection Data

Clamping units	9
Total number of potentials	9
Number of connection types	1
Number of levels	1

Connection 1

Connection technology	CAGE CLAMP®
Actuation type	Operating tool
Actuation direction 1	Operation parallel to conductor entry
Actuation direction 2	Operation perpendicular to conductor entry
Solid conductor	0.08 … 2.5 mm² / 28 … 12 AWG
Fine-stranded conductor	0.08 … 2.5 mm² / 28 … 12 AWG
Fine-stranded conductor; with insulated ferrule	0.25 … 1.5 mm²
Fine-stranded conductor; with uninsulated ferrule	0.25 … 2.5 mm²
Strip length	8 … 9 mm / 0.31 … 0.35 inches
Pole number	9
Conductor entry direction to mating direction	0 °

Physical data

Pin spacing	7.5 mm / 0.295 inches
Width	79.8 mm / 3.142 inches
Height	14.3 mm / 0.563 inches
Depth	27.5 mm / 1.083 inches

Continued on next page

Mechanical data

Variable coding	Yes
Mounting type	Mounting flange
Mounting type	Feed-through mounting Panel mounting
Anti-rotation protection	Yes
Suitable for through-panel applications	Yes

Plug-in connection

Contact type (pluggable connector)	Male connector/plug
Connector (connection type)	for conductor
Mismating protection	No

Material data

Note (material data)	Information on material specifications can be found here
Color	gray
Material group	I
Insulation material (main housing)	Polyamide (PA66)
Flammability class per UL94	V0
Clamping spring material	Chrome-nickel spring steel (CrNi)
Contact material	Electrolytic copper (E_{Cu})
Contact Plating	Tin
Fire load	0.311 MJ
Weight	17.4 g

Environmental requirements

Limit temperature range	-60 … +100 °C
Processing temperature	-35 … +60 °C

Environmental Testing

Test specification: Railway applications – Rolling stock – Electronic equipment	DIN EN 50155 (VDE 0115-200):2022-06
Test procedure: Railway applications – Rolling stock equipment – Vibration and shock tests	DIN EN 61373 (VDE 0115-0106):2011-04
Spectrum/Mounting location	Service life test, Category 1, Class A/B
Functional test with noise-like oscillations	Test passed according to Section 8 of the standard
Frequency	f_1 = 5 Hz to f_2 = 150 Hz
Acceleration	0.101g (highest test level used for all axes)
Test duration per axis	10 min.
Test directions	X, Y and Z axes
Monitoring of contact faults and interruptions	Passed
Voltage drop measurement before and after each axis	Passed
Simulated service life test through increased levels of noise-like oscillations	Test passed according to Section 9 of the standard
Frequency	f_1 = 5 Hz to f_2 = 150 Hz
Acceleration	0.572g (highest test level used for all axes)
Test duration per axis	5 h
Test directions	X, Y and Z axes
Extended testing: Monitoring of contact faults and interruptions	Passed
Extended testing: Voltage drop measurement before and after each axis	Passed

Continued on next page

Environmental Testing

Shock test	Test passed according to Section 10 of the standard
Shock pulse form	Half sine
Acceleration	5g (highest test level used for all axes)
Shock duration	30 ms
Number of shocks (per axis)	3 pos. und 3 neg.
Test directions	X, Y and Z axes
Extended testing: Monitoring of contact faults and interruptions	Passed
Extended testing: Voltage drop measurement before and after each axis	Passed
Vibration and shock stress for rolling stock equipment	Passed

Commercial data

Product Group	3 (Multi Conn. System)
PU (SPU)	25 pcs
Packaging type	Box
Country of origin	DE
GTIN	4044918267120
Customs tariff number	85366930000

Product Classification

UNSPSC	39121409
eCl@ss 10.0	27-44-03-09
eCl@ss 9.0	27-44-03-09
ETIM 9.0	EC002638
ETIM 10.0	EC002638
ECCN	NO US CLASSIFICATION

Environmental Product Compliance

RoHS Compliance Status	Compliant,No Exemption

Approvals / Certificates

General approvals

Approval	Standard	Certificate Name
CB DEKRA Certification B.V.	IEC 61984	NL-113351
KEMA/KEUR DEKRA Certification B.V.	EN 61984	71-130478 REV.1
UR Underwriters Laboratories Inc.	UL 1977	E 45171
UR Underwriters Laboratories Inc.	UL 1059	E45172

Declarations of conformity and manufacturer's declarations

Approval	Standard	Certificate Name
Railway WAGO GmbH & Co. KG	-	Railway Ready

Continued on next page

Approvals for marine applications

Approval	Standard	Certificate Name
ABS American Bureau of Shipping	-	24-0095975-PDA
BV Bureau Veritas S.A.	IEC 60998	11915/E0 BV
DNV DNV GL SE	-	TAE000016Z
PRS Polski Rejestr Statków	-	TE/1095/880590/23

Downloads

Environmental Product Compliance

Compliance Search

Environmental Product Compliance
731-609/019-000

Documentation

Additional Information

Technical Section	03.04.2019	pdf 2027.26 KB

CAD/CAE-Data

CAD data

2D/3D Models
731-609/019-000

CAE data

EPLAN Data Portal
731-609/019-000

ZUKEN Portal
731-609/019-000

1 Compatible Products

1.1 System counterpart

1.1.1 Female connector/socket



Item No.: 231-209/026-000
1-conductor female connector; CAGE CLAMP®; 2.5 mm²; Pin spacing 7.5 mm; 9-pole; gray



Item No.: 232-839
THT female header; angled; Pin spacing 7.5 mm; 9-pole; 0.6 x 1.0 mm solder pin; gray



Item No.: 232-739
THT female header; straight; Pin spacing 7.5 mm; 9-pole; 0.6 x 1.0 mm solder pin; gray

Continued on next page

1.2 Optional Accessories

1.2.1 Coding

1.2.1.1 Coding



Item No.: 231-130
Coding key; snap-on type; light gray

1.2.2 Cover

1.2.2.1 Cover



Item No.: 231-668
Lockout caps; for covering unused clamping units; gray

1.2.3 Ferrule

1.2.3.1 Ferrule



Item No.: 216-301
Ferrule; Sleeve for 0.25 mm² / AWG 24; insulated; electro-tin plated; yellow

Item No.: 216-302
Ferrule; Sleeve for 0.34 mm² / 22 AWG; insulated; electro-tin plated; light turquoise

Item No.: 216-201
Ferrule; Sleeve for 0.5 mm² / 20 AWG; insulated; electro-tin plated; electrolytic copper; acc. to DIN 46228, Part 4/09.90; white



Item No.: 216-101
Ferrule; Sleeve for 0.5 mm² / AWG 22; uninsulated; electro-tin plated; silver-colored

Item No.: 216-202
Ferrule; Sleeve for 0.75 mm² / 18 AWG; insulated; electro-tin plated; gray



Item No.: 216-102
Ferrule; Sleeve for 0.75 mm² / 18 AWG; uninsulated; electro-tin plated; silver-colored

Item No.: 216-203
Ferrule; Sleeve for 1 mm² / AWG 18; insulated; electro-tin plated; red



Item No.: 216-103
Ferrule; Sleeve for 1 mm² / AWG 18; uninsulated; electro-tin plated



Item No.: 216-204
Ferrule; Sleeve for 1.5 mm² / AWG 16; insulated; electro-tin plated; black



Item No.: 216-104
Ferrule; Sleeve for 1.5 mm² / AWG 16; uninsulated; electro-tin plated; silver-colored

1.2.4 Installation

1.2.4.1 Mounting accessories



Item No.: 231-295
Screw with nut



Item No.: 231-195
Screw with nut; M2x12; for fixing element



Item No.: 209-147
Self-tapping screw



Item No.: 231-194
Self-tapping screw; B 2.2x13, fixing hole 1.8 mm Ø

1.2.5 Insulation stop

1.2.5.1 Insulation stop



Item No.: 231-673
Insulation stop; 0.08-0.2 mm² / 0.2 mm² "s"; white



Item No.: 231-674
Insulation stop; 0.25 - 0.5 mm²; light gray



Item No.: 231-675
Insulation stop; 0.75 - 1 mm²; dark gray

1.2.6 Marking

1.2.6.1 Marking strip

Item No.: 210-331/750-202
Marking strips; as a DIN A4 sheet; MARKED; 1-16 (100x); Height of marker strip: 2.3 mm/0.091 in; Strip length 182 mm; Horizontal marking; Self-adhesive; white



Item No.: 210-332/750-020
Marking strips; as a DIN A4 sheet; MARKED; 1-20 (80x); Height of marker strip: 3 mm; Strip length 182 mm; Horizontal marking; Self-adhesive; white

1.2.7 Tool

1.2.7.1 Operating tool



Item No.: 210-720
Operating tool; Blade: 3.5 x 0.5 mm; with a partially insulated shaft; multicoloured



Item No.: 210-657
Operating tool; Blade: 3.5 x 0.5 mm; with a partially insulated shaft; short; multicoloured



Item No.: 231-291
Operating tool; made of insulating material; 1-way; loose; red



Item No.: 231-131
Operating tool; made of insulating material; 1-way; loose; white

Installation Notes

Conductor termination

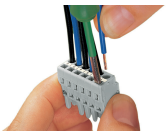

Inserting a conductor via 3.5 mm screwdriver – CAGE CLAMP® actuation parallel to conductor entry.



Inserting a conductor via 3.5 mm screwdriver – CAGE CLAMP® actuation perpendicular to conductor entry.

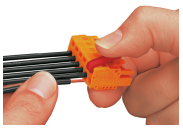

Inserting a conductor into CAGE CLAMP® unit via operating tool (231-291).



Inserting a conductor via operating tool.

Coding

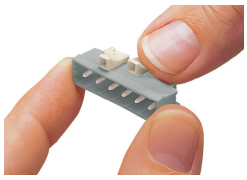

Coding a male header – fitting coding key(s).

Continued on next page

Testing

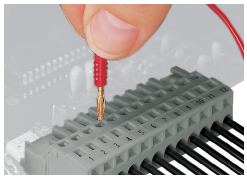

Testing – female connector with CAGE CLAMP®
Integrated test ports for testing perpendicular to conductor entry via 2 or 2.3 mm Ø test plug

Installation

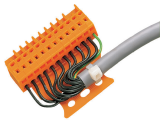

Male connector with strain relief plate

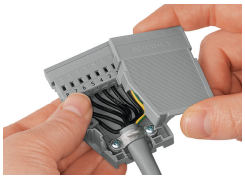

Strain relief housing shown with a male connector equipped with CAGE CLAMP®

Marking

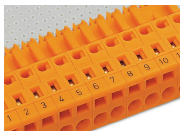

Labeling via direct marking or self-adhesive strips.