# Data Sheet | Item Number: 732-102/026-000

1-conductor female connector, angled; CAGE CLAMP®; 2.5 mm²; Pin spacing 7.5 mm; 2-pole; 2,50 mm²; gray

https://www.wago.com/732-102/026-000

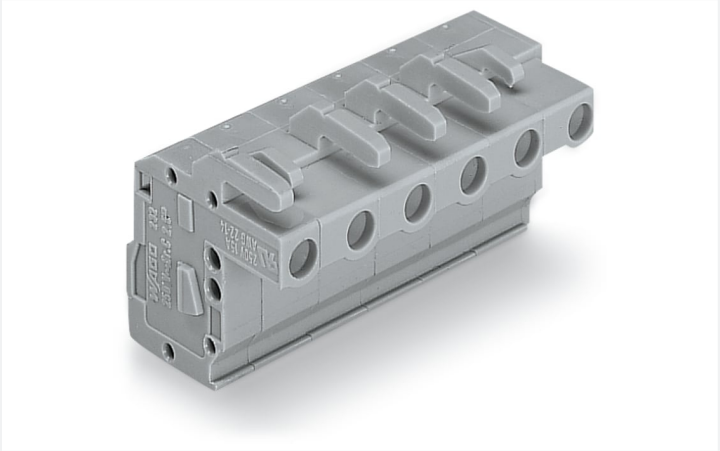

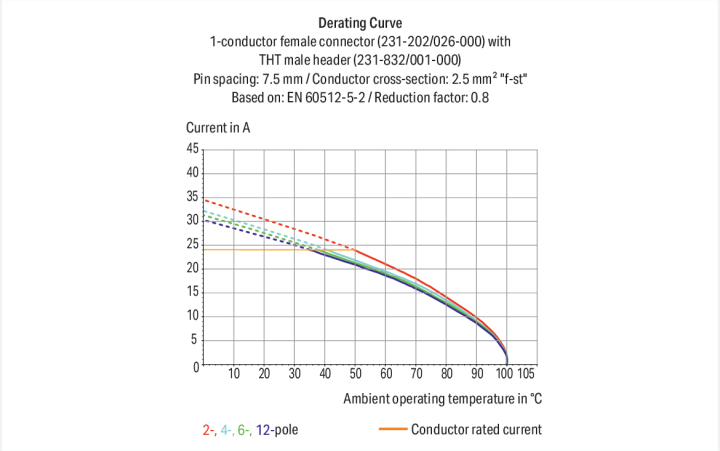


Color: gray

Similar to illustration

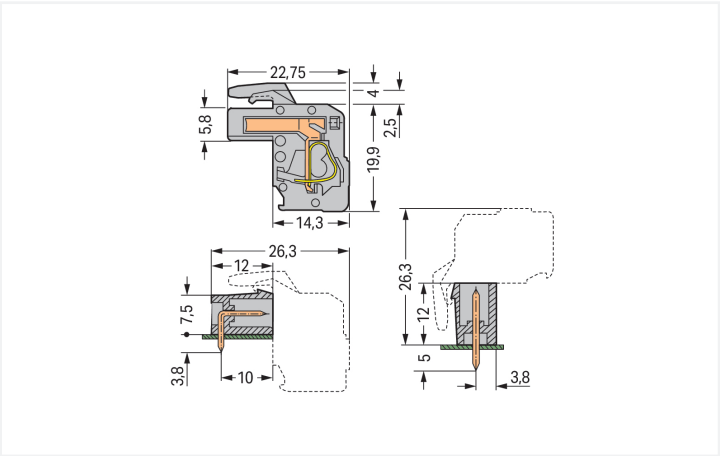


Dimensions in mm
Total length = (pole no. – 1) x pin spacing + 5 mm + 1.5 mm + 0.9 mm

Female connector, 732 Series, operating tool

This female connector (item number 732-102/026-000) simplifies electrical installations. Strip lengths must be between 8 and 9 mm when connecting conductors to this female connector. This product features one conductor terminal and utilizes CAGE CLAMP®. Our celebrated universal connection known as CAGE CLAMP® is industry-leading when it comes to connection technology and electrical interconnections. Dimensions: (14.9 x 23.9 x 22.75) mm (width x height x depth). This female connector is suitable for conductor cross sections ranging from 0.08 mm² to 2.5 mm².

The contact surface is coated with tin.

## Notes

| | |
|---|---|
| Safety Information | The *MCS – MULTI CONNECTION SYSTEM* includes connectors without breaking capacity in accordance with DIN EN 61984. When used as intended, these connectors must not be connected/disconnected when live or under load.When used as intended, these connectors must not be connected/disconnected when live or under load. The circuit design should ensure header pins, which can be touched, are not live when unmated. |
| Variants: | Gold-plated or partially gold-plated contact surfaces<br>Other versions (or variants) can be requested from WAGO Sales or configured at https://configurator.wago.com/. |

## Electrical data

| Ratings per | IEC/EN 60664-1 | | |
|---|---|---|---|
| Overvoltage category | III | III | II |
| Pollution degree | 3 | 2 | 2 |
| Nominal voltage | 500 V | 630 V | 1000 V |
| Rated impulse withstand voltage | 6 kV | 6 kV | 6 kV |
| Rated current | 14 A | 14 A | 14 A |

| Approvals per | UL 1059 | | |
|---|---|---|---|
| Use group | B | C | D |
| Rated voltage | 300 V | - | 300 V |
| Rated current | 15 A | - | 10 A |

| Approvals per | UL 1977 |
|---|---|
| Rated voltage | 600 V |
| Rated current | 15 A |

| Approvals per | CSA | | |
|---|---|---|---|
| Use group | B | C | D |
| Rated voltage | 300 V | - | 300 V |
| Rated current | 15 A | - | 10 A |

## Connection Data

| | |
|---|---|
| Clamping units | 2 |
| Total number of potentials | 2 |
| Number of connection types | 1 |
| Number of levels | 1 |

### Connection 1

| | |
|---|---|
| Connection technology | CAGE CLAMP® |
| Actuation type | Operating tool |
| Actuation direction 1 | Operation parallel to conductor entry |
| Actuation direction 2 | Operation perpendicular to conductor entry |
| Solid conductor | 0.08 … 2.5 mm² / 28 … 12 AWG |
| Fine-stranded conductor | 0.08 … 2.5 mm² / 28 … 12 AWG |
| Fine-stranded conductor; with insulated ferrule | 0.25 … 1.5 mm² |
| Fine-stranded conductor; with uninsulated ferrule | 0.25 … 2.5 mm² |
| Strip length | 8 … 9 mm / 0.31 … 0.35 inches |
| Pole number | 2 |
| Conductor entry direction to mating direction | 270 ° |

## Physical data

| | |
|---|---|
| Pin spacing | 7.5 mm / 0.295 inches |
| Width | 14.9 mm / 0.587 inches |
| Height | 23.9 mm / 0.941 inches |
| Depth | 22.75 mm / 0.896 inches |


Continued on next page

## Mechanical data

| | |
|---|---|
| Variable coding | Yes |
| Design | angled |
| Anti-rotation protection | Yes |

## Plug-in connection

| | |
|---|---|
| Contact type (pluggable connector) | Female connector/socket |
| Connector (connection type) | for conductor |
| Mismating protection | No |

## Material data

| | |
|---|---|
| Note (material data) | Information on material specifications can be found here |
| Color | gray |
| Material group | I |
| Insulation material (main housing) | Polyamide (PA66) |
| Flammability class per UL94 | V0 |
| Clamping spring material | Chrome-nickel spring steel (CrNi) |
| Contact material | Copper alloy |
| Contact Plating | Tin |
| Fire load | 0.073 MJ |
| Weight | 4.4 g |

## Environmental requirements

| | |
|---|---|
| Limit temperature range | -60 … +85 °C |
| Processing temperature | -35 … +60 °C |

## Commercial data

| | |
|---|---|
| Product Group | 3 (Multi Conn. System) |
| PU (SPU) | 100 pcs |
| Packaging type | Box |
| Country of origin | DE |
| GTIN | 4044918391467 |
| Customs tariff number | 85366990990 |

## Product Classification

| | |
|---|---|
| UNSPSC | 39121409 |
| eCl@ss 10.0 | 27-44-03-09 |
| eCl@ss 9.0 | 27-44-03-09 |
| ETIM 9.0 | EC002638 |
| ETIM 10.0 | EC002638 |
| ECCN | NO US CLASSIFICATION |


Continued on next page

## Environmental Product Compliance

| | |
|---|---|
| RoHS Compliance Status | Compliant,No Exemption |

## Approvals / Certificates

### General approvals

| Approval | Standard | Certificate Name |
|---|---|---|
| CB<br>DEKRA Certification B.V. | IEC 61984 | NL-113351 |
| KEMA/KEUR<br>DEKRA Certification B.V. | EN 61984 | 71-130478 REV.1 |
| UR<br>Underwriters Laboratories Inc. | UL 1977 | E 45171 |
| UR<br>Underwriters Laboratories Inc. | UL 1059 | E45172 |

### Approvals for marine applications

| Approval | Standard | Certificate Name |
|---|---|---|
| ABS<br>American Bureau of Shipping | - | 24-0095975-PDA |

## Downloads

### Environmental Product Compliance

**Compliance Search**

Environmental Product Compliance
732-102/026-000

### Documentation

**Additional Information**

| | | |
|---|---|---|
| Technical Section | 03.04.2019 | pdf<br>2027.26 KB |

## CAD/CAE-Data

**CAD data**

2D/3D Models
732-102/026-000

**CAE data**

EPLAN Data Portal
732-102/026-000

ZUKEN Portal
732-102/026-000


Continued on next page

# 1 Compatible Products

## 1.1 System counterpart

### 1.1.1 Male connector/plug



Item No.: 731-602
1-conductor male connector; CAGE CLAMP®; 2.5 mm²; Pin spacing 7.5 mm; 2-pole; 2,50 mm²; gray



Item No.: 231-832/001-000
THT male header; 1.0 x 1.0 mm solder pin; angled; Pin spacing 7.5 mm; 2-pole; gray



Item No.: 231-232/001-000
THT male header; 1.0 x 1.0 mm solder pin; straight; Pin spacing 7.5 mm; 2-pole; gray

## 1.2 Optional Accessories

### 1.2.1 Ferrule

#### 1.2.1.1 Ferrule



Item No.: 216-301
Ferrule; Sleeve for 0.25 mm² / AWG 24; insulated; electro-tin plated; yellow



Item No.: 216-302
Ferrule; Sleeve for 0.34 mm² / 22 AWG; insulated; electro-tin plated; light turquoise



Item No.: 216-201
Ferrule; Sleeve for 0.5 mm² / 20 AWG; insulated; electro-tin plated; electrolytic copper; acc. to DIN 46228, Part 4/09.90; white



Item No.: 216-101
Ferrule; Sleeve for 0.5 mm² / AWG 22; uninsulated; electro-tin plated; silver-colored



Item No.: 216-202
Ferrule; Sleeve for 0.75 mm² / 18 AWG; insulated; electro-tin plated; gray



Item No.: 216-102
Ferrule; Sleeve for 0.75 mm² / 18 AWG; uninsulated; electro-tin plated; silver-colored



Item No.: 216-203
Ferrule; Sleeve for 1 mm² / AWG 18; insulated; electro-tin plated; red



Item No.: 216-103
Ferrule; Sleeve for 1 mm² / AWG 18; uninsulated; electro-tin plated



Item No.: 216-204
Ferrule; Sleeve for 1.5 mm² / AWG 16; insulated; electro-tin plated; black



Item No.: 216-104
Ferrule; Sleeve for 1.5 mm² / AWG 16; uninsulated; electro-tin plated; silver-colored



Item No.: 216-205
Ferrule; Sleeve for 2.08 mm² / AWG 14; insulated; electro-tin plated; yellow



Item No.: 216-206
Ferrule; Sleeve for 2.5 mm² / AWG 14; insulated; electro-tin plated; blue

### 1.2.2 Insulation stop

#### 1.2.2.1 Insulation stop



Item No.: 231-673
Insulation stop; 0.08-0.2 mm² / 0.2 mm² "s"; white



Item No.: 231-674
Insulation stop; 0.25 - 0.5 mm²; light gray



Item No.: 231-675
Insulation stop; 0.75 - 1 mm²; dark gray

### 1.2.3 Marking

#### 1.2.3.1 Marking strip



Item No.: 210-331/750-202
Marking strips; as a DIN A4 sheet; MARKED; 1-16 (100x); Height of marker strip: 2.3 mm/0.091 in; Strip length 182 mm; Horizontal marking; Self-adhesive; white



Item No.: 210-332/750-020
Marking strips; as a DIN A4 sheet; MARKED; 1-20 (80x); Height of marker strip: 3 mm; Strip length 182 mm; Horizontal marking; Self-adhesive; white


Continued on next page

## 1.2.4 Strain relief

### 1.2.4.1 Strain relief housing



Item No.: 232-662
Strain relief housing; for female and male connectors; 2 parts; Pin spacing 7.5 mm; 2-pole; gray

## 1.2.5 Test and measurement

### 1.2.5.1 Testing accessories



Item No.: 210-136
Test plug; 2 mm Ø; with 500 mm cable; red



Item No.: 231-662
Test plugs for female connectors; for 7.5 mm and 7.62 mm pin spacing; 2,50 mm²; light gray

## 1.2.6 Tool

### 1.2.6.1 Operating tool



Item No.: 231-291
Operating tool; made of insulating material; 1-way; loose; red

## Installation Notes

### Conductor termination

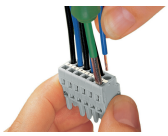

Inserting a conductor via 3.5 mm screwdriver – CAGE CLAMP® actuation parallel to conductor entry.

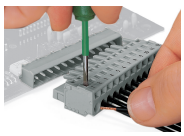

Inserting a conductor via 3.5 mm screwdriver – CAGE CLAMP® actuation perpendicular to conductor entry.

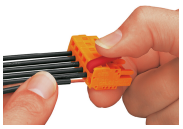

Inserting a conductor into CAGE CLAMP® unit via operating tool (231-291).



Inserting a conductor via operating tool.

### Coding



Coding a female connector by removing coding finger(s).


Continued on next page

## Testing

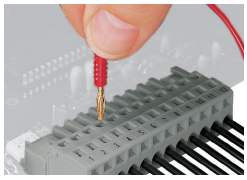

Testing – female connector with CAGE CLAMP®
Integrated test ports for testing perpendicular to conductor entry via 2 or 2.3 mm Ø test plug

## Installation

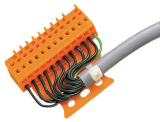

Male connector with strain relief plate

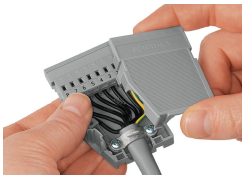

Strain relief housing shown with a male connector equipped with CAGE CLAMP®

## Marking

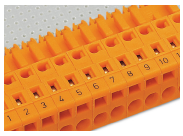

Labeling via direct marking or self-adhesive strips.