Data Sheet | Item Number: 732-112/026-000

1-conductor female connector, angled; CAGE CLAMP®; 2.5 mm²; Pin spacing 7.5 mm; 12-pole; 2,50 mm²; gray

https://www.wago.com/732-112/026-000

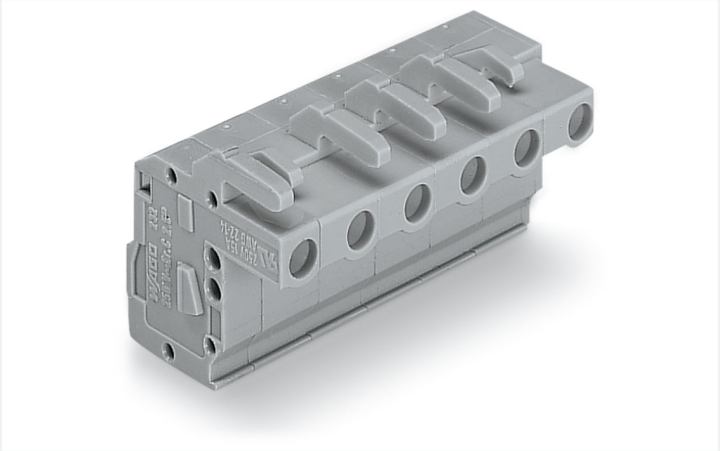

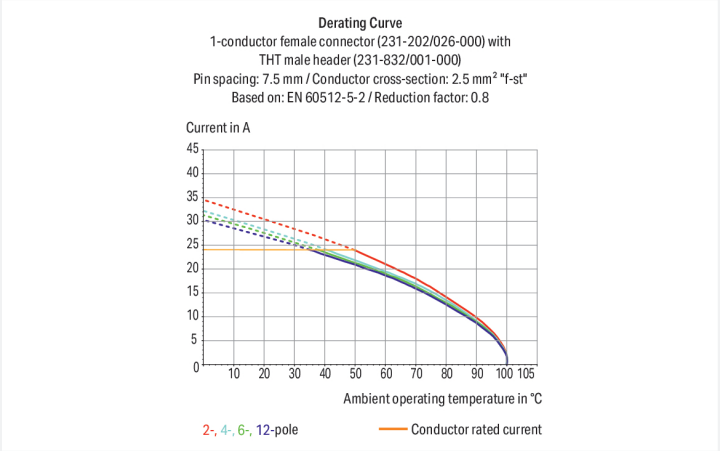

Color: gray

Similar to illustration

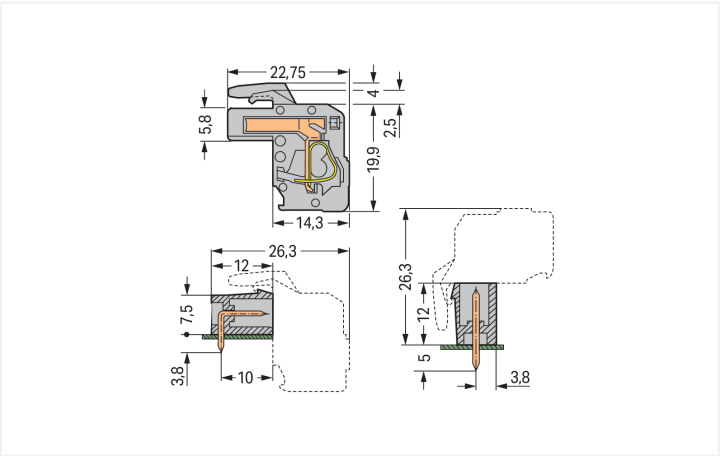

Dimensions in mm
Total length = (pole no. – 1) x pin spacing + 5 mm + 1.5 mm + 0.9 mm

Female connector, 732 Series, with 7.5 mm pin spacing

Our female connector (item number 732-112/026-000) ensures effortless electrical installations. Conductors should only be connected to this female connector if their strip length is between 8 and 9 mm . Featuring one conductor terminal along with CAGE CLAMP®, this product delivers reliable performance. Our proven universal connection known as CAGE CLAMP® is the industry standard when it comes to connection technology and electrical interconnections. The item's dimensions are (89.9 x 23.9 x 22.75) mm (width x height x depth). This female connector is suitable for conductor cross sections ranging from 0.08 mm² to 2.5 mm².

Tin is used for coating the contact surfaces.

Notes

Safety Information	The *MCS – MULTI CONNECTION SYSTEM* includes connectors without breaking capacity in accordance with DIN EN 61984. When used as intended, these connectors must not be connected/disconnected when live or under load.When used as intended, these connectors must not be connected/disconnected when live or under load. The circuit design should ensure header pins, which can be touched, are not live when unmated.
Variants:	Gold-plated or partially gold-plated contact surfaces Other versions (or variants) can be requested from WAGO Sales or configured at https://configurator.wago.com/.

Electrical data

Ratings per	IEC/EN 60664-1		
Overvoltage category	III	III	II
Pollution degree	3	2	2
Nominal voltage	500 V	630 V	1000 V
Rated impulse withstand voltage	6 kV	6 kV	6 kV
Rated current	14 A	14 A	14 A

Approvals per	UL 1059		
Use group	B	C	D
Rated voltage	300 V	-	300 V
Rated current	15 A	-	10 A

Approvals per	UL 1977
Rated voltage	600 V
Rated current	15 A

Approvals per	CSA		
Use group	B	C	D
Rated voltage	300 V	-	300 V
Rated current	15 A	-	10 A

Connection Data

Clamping units	12
Total number of potentials	12
Number of connection types	1
Number of levels	1

Connection 1

Connection technology	CAGE CLAMP®
Actuation type	Operating tool
Actuation direction 1	Operation parallel to conductor entry
Actuation direction 2	Operation perpendicular to conductor entry
Solid conductor	0.08 … 2.5 mm² / 28 … 12 AWG
Fine-stranded conductor	0.08 … 2.5 mm² / 28 … 12 AWG
Fine-stranded conductor; with insulated ferrule	0.25 … 1.5 mm²
Fine-stranded conductor; with uninsulated ferrule	0.25 … 2.5 mm²
Strip length	8 … 9 mm / 0.31 … 0.35 inches
Pole number	12
Conductor entry direction to mating direction	270 °

Physical data

Pin spacing	7.5 mm / 0.295 inches
Width	89.9 mm / 3.539 inches
Height	23.9 mm / 0.941 inches
Depth	22.75 mm / 0.896 inches

Continued on next page

Mechanical data

Variable coding	Yes
Design	angled
Anti-rotation protection	Yes

Plug-in connection

Contact type (pluggable connector)	Female connector/socket
Connector (connection type)	for conductor
Mismating protection	No

Material data

Note (material data)	Information on material specifications can be found here
Color	gray
Material group	I
Insulation material (main housing)	Polyamide (PA66)
Flammability class per UL94	V0
Clamping spring material	Chrome-nickel spring steel (CrNi)
Contact material	Copper alloy
Contact Plating	Tin
Fire load	0.462 MJ
Weight	27 g

Environmental requirements

Limit temperature range	-60 … +85 °C
Processing temperature	-35 … +60 °C

Commercial data

Product Group	3 (Multi Conn. System)
PU (SPU)	25 pcs
Packaging type	Box
Country of origin	DE
GTIN	4044918392068
Customs tariff number	85366990990

Product Classification

UNSPSC	39121409
eCl@ss 10.0	27-44-03-09
eCl@ss 9.0	27-44-03-09
ETIM 9.0	EC002638
ETIM 10.0	EC002638
ECCN	NO US CLASSIFICATION

Continued on next page

Environmental Product Compliance

RoHS Compliance Status	Compliant,No Exemption

Approvals / Certificates

General approvals

Approval	Standard	Certificate Name
CB DEKRA Certification B.V.	IEC 61984	NL-113351
KEMA/KEUR DEKRA Certification B.V.	EN 61984	71-130478 REV.1
UR Underwriters Laboratories Inc.	UL 1977	E 45171
UR Underwriters Laboratories Inc.	UL 1059	E45172

Approvals for marine applications

Approval	Standard	Certificate Name
ABS American Bureau of Shipping	-	24-0095975-PDA

Downloads

Environmental Product Compliance

Compliance Search

Environmental Product Compliance
732-112/026-000

Documentation

Additional Information

Technical Section	03.04.2019	pdf 2027.26 KB

CAD/CAE-Data

CAD data

2D/3D Models
732-112/026-000

CAE data

EPLAN Data Portal
732-112/026-000

ZUKEN Portal
732-112/026-000

Continued on next page

1 Compatible Products

1.1 System counterpart

1.1.1 Male connector/plug



Item No.: 731-612
1-conductor male connector; CAGE CLAMP®; 2.5 mm²; Pin spacing 7.5 mm; 12-pole; 2,50 mm²; gray



Item No.: 231-842/001-000
THT male header; 1.0 x 1.0 mm solder pin; angled; Pin spacing 7.5 mm; 12-pole; gray



Item No.: 231-242/001-000
THT male header; 1.0 x 1.0 mm solder pin; straight; Pin spacing 7.5 mm; 12-pole; gray

1.2 Optional Accessories

1.2.1 Ferrule

1.2.1.1 Ferrule

Item No.: 216-301
Ferrule; Sleeve for 0.25 mm² / AWG 24; insulated; electro-tin plated; yellow

Item No.: 216-302
Ferrule; Sleeve for 0.34 mm² / 22 AWG; insulated; electro-tin plated; light turquoise

Item No.: 216-201
Ferrule; Sleeve for 0.5 mm² / 20 AWG; insulated; electro-tin plated; electrolytic copper; acc. to DIN 46228, Part 4/09.90; white



Item No.: 216-101
Ferrule; Sleeve for 0.5 mm² / AWG 22; uninsulated; electro-tin plated; silver-colored

Item No.: 216-202
Ferrule; Sleeve for 0.75 mm² / 18 AWG; insulated; electro-tin plated; gray



Item No.: 216-102
Ferrule; Sleeve for 0.75 mm² / 18 AWG; uninsulated; electro-tin plated; silver-colored

Item No.: 216-203
Ferrule; Sleeve for 1 mm² / AWG 18; insulated; electro-tin plated; red



Item No.: 216-103
Ferrule; Sleeve for 1 mm² / AWG 18; uninsulated; electro-tin plated



Item No.: 216-204
Ferrule; Sleeve for 1.5 mm² / AWG 16; insulated; electro-tin plated; black



Item No.: 216-104
Ferrule; Sleeve for 1.5 mm² / AWG 16; uninsulated; electro-tin plated; silver-colored



Item No.: 216-205
Ferrule; Sleeve for 2.08 mm² / AWG 14; insulated; electro-tin plated; yellow



Item No.: 216-206
Ferrule; Sleeve for 2.5 mm² / AWG 14; insulated; electro-tin plated; blue

1.2.2 Insulation stop

1.2.2.1 Insulation stop



Item No.: 231-673
Insulation stop; 0.08-0.2 mm² / 0.2 mm² "s"; white



Item No.: 231-674
Insulation stop; 0.25 - 0.5 mm²; light gray



Item No.: 231-675
Insulation stop; 0.75 - 1 mm²; dark gray

1.2.3 Marking

1.2.3.1 Marking strip

Item No.: 210-331/750-202
Marking strips; as a DIN A4 sheet; MARKED; 1-16 (100x); Height of marker strip: 2.3 mm/0.091 in; Strip length 182 mm; Horizontal marking; Self-adhesive; white



Item No.: 210-332/750-020
Marking strips; as a DIN A4 sheet; MARKED; 1-20 (80x); Height of marker strip: 3 mm; Strip length 182 mm; Horizontal marking; Self-adhesive; white

Continued on next page

1.2.4 Test and measurement

1.2.4.1 Testing accessories



Item No.: 210-136
Test plug; 2 mm Ø; with 500 mm cable; red



Item No.: 231-662
Test plugs for female connectors; for 7.5 mm and 7.62 mm pin spacing; 2,50 mm²; light gray

1.2.5 Tool

1.2.5.1 Operating tool



Item No.: 231-291
Operating tool; made of insulating material; 1-way; loose; red

Installation Notes

Conductor termination

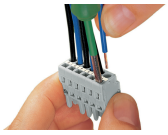

Inserting a conductor via 3.5 mm screwdriver – CAGE CLAMP® actuation parallel to conductor entry.

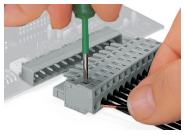

Inserting a conductor via 3.5 mm screwdriver – CAGE CLAMP® actuation perpendicular to conductor entry.

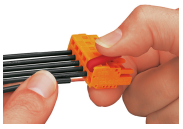

Inserting a conductor into CAGE CLAMP® unit via operating tool (231-291).



Inserting a conductor via operating tool.

Coding



Coding a female connector by removing coding finger(s).

Testing

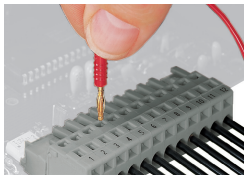

Testing – female connector with CAGE CLAMP®
Integrated test ports for testing perpendicular to conductor entry via 2 or 2.3 mm Ø test plug

Continued on next page

Installation

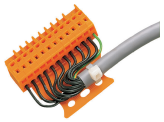

Male connector with strain relief plate

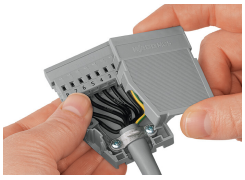

Strain relief housing shown with a male connector equipped with CAGE CLAMP®

Marking

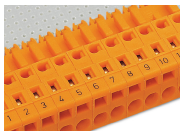

Labeling via direct marking or self-adhesive strips.