Data Sheet | Item Number: 750-435

1-channel digital input; NAMUR; Intrinsically safe

https://www.wago.com/750-435



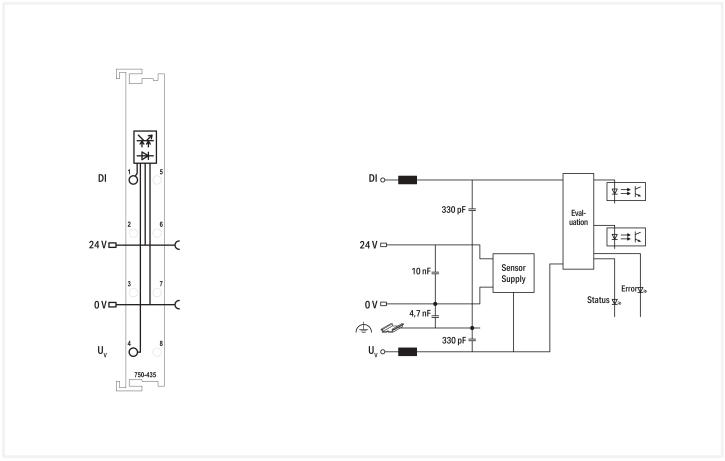

Color: ■ blue

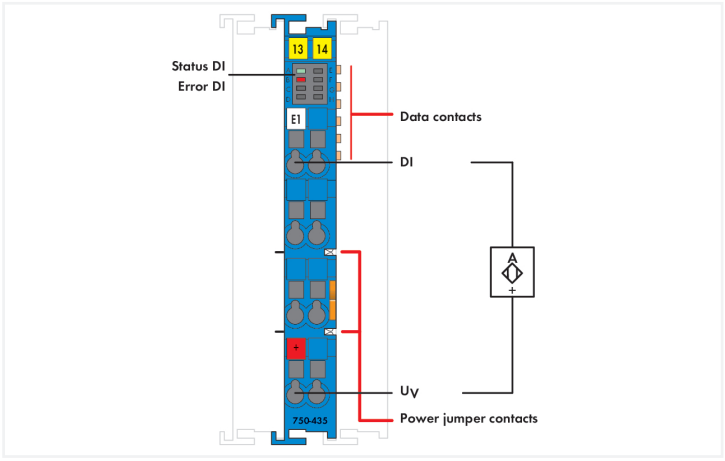

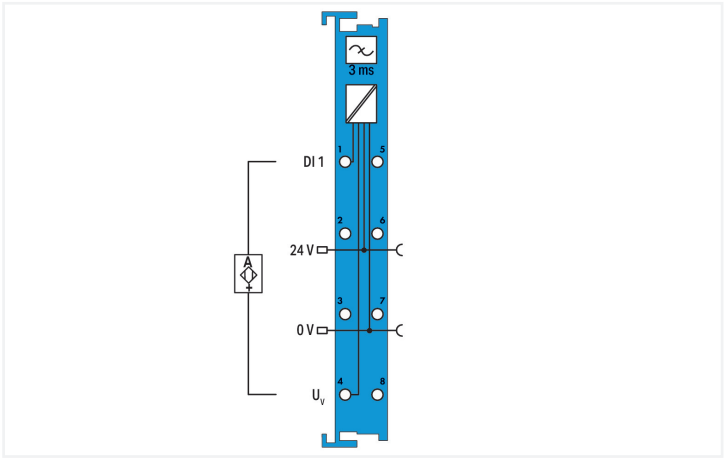

This digital input module records binary signals from sensors operating in Zone 0+1 hazardous areas.
NAMUR sensors, optocouplers, mechanical contacts (in conjunction with resistance coupling module, available as an accessory) or other actuating elements can be connected via intrinsically safe devices.
The WAGO I/O System 750/753 must be installed either in Zone 2 or in a non-hazardous area.
Each sensor is supplied with a short-circuit-protected voltage of 8.2 V.
Indicators:

- Green LED (signal on)
- Red LED (short circuit, wire breakage)

Field and system levels are electrically isolated.

Notes

Note	The digital input module must only be operated with a 24 VDC Ex i power supply! General information on explosion protection, including installation regulations, can be found in the WAGO I/O System 750/753 manuals!

Technical data

Item description	1-Channel Digital Input; NAMUR
Number of digital inputs	1
Total number of channels (module)	1
Signal type	NAMUR
Signal current (0) NAMUR	≤1.2 mA
Signal current (1) NAMUR	≥2.1 mA
Sensor connection	1 x (2-wire)
Input characteristic	high-side switching
Input filter	3 ms
Sensor supply	8.2 VDC
Input pulse length	≥5 ms
Input pulse separation	≥3 ms
Protection against incorrect wiring	Short circuit monitoring: > 6.4 mA Wire break monitoring: < 0.2 mA
Open-circuit voltage	8.2 V
Short-circuit current	≤ 8.2 mA
Switching hysteresis	0.2 mA
Input resistance	1000 Ω
Intrinsically safe Ex i	Yes
Diagnostics	Short circuit, wire break
Input data width (internal) max.	2 bits
Supply voltage (system)	5 VDC; via data contacts
Current consumption (system supply)	2.5 mA
Supply voltage (field)	24 VDC; (Ex i power supply: U_o = max. 26.8 V); via power jumper contacts (supply via blade contact; distribution via spring contact)
Current consumption, field supply (module with no external load)	13 mA
Power consumption $P_{max.}$	0.5 W
Power loss P_l	0.37 W
Isolation	300 VAC system/supply
Number of incoming power jumper contacts	2
Number of outgoing power jumper contacts	2
Current carrying capacity (power jumper contacts)	1 A
Indicators	LED (A) green: Status DI; LED (B) red: Error DI

Explosion protection

Identification	**ATEX:** II 3 (1) G Ex ec [ia Ga] IIC T4 Gc; II (1) D [Ex ia Da] IIIC; I (M1) [Ex ia Ma] I **IECEx/INMETRO:** Ex ec [ia Ga] IIC T4 Gc; [Ex ia Da] IIIC; [Ex ia Ma] I **cULus (Zone classified):** Cl I Zn 2 AEx nA [ia Ga] IIC T4 Gc; Cl I Zn 2 AEx nA [ia IIIC] IIC T4 Gc; Ex nA [ia Ga] IIC T4 Gc X; Ex nA [ia IIIC] IIC T4 Gc X **cULus (Devision classified):** Class I, Div. 2, Group A B C D, T4
Ex standard	EN IEC 60079-0, -7, -11
Safety-relevant data (circuit)	U_o = 12 V; I_o = 16 mA; P_o = 48 mW; linear characteristic curve
Reactances Ex ia IIC	L_o = 180 mH; C_o = 1.4 µF
Reactances Ex ia IIB	L_o = 560 mH; C_o = 9 µF
Reactances Ex ia IIA	L_o = 0.9 H; C_o = 36 µF
Reactances Ex ia I	L_o = 1 H; C_o = 38 µF
Reactances (note)	Reactances without accounting for the concurrence of capacitance (C_o) and inductance (L_o)

Continued on next page

Connection Data

Connection technology: I/O	2 x CAGE CLAMP®
Connectable conductor materials	Copper
Connection type	Inputs/outputs
Solid conductor	0.08 … 2.5 mm² / 28 … 14 AWG
Fine-stranded conductor	0.08 … 2.5 mm² / 28 … 14 AWG
Strip length	8 … 9 mm / 0.31 … 0.35 inches

Physical data

Width	12 mm / 0.472 inches
Height	100 mm / 3.937 inches
Depth	67.8 mm / 2.669 inches
Depth from upper-edge of DIN-rail	60.6 mm / 2.386 inches

Mechanical data

Mounting type	DIN-35 rail

Material data

Color	blue
Housing material	Polycarbonate; polyamide 6.6
Fire load	0.886 MJ
Weight	46 g
Conformity marking	CE

Environmental requirements

Ambient temperature (operation)	0 … +55 °C
Ambient temperature (storage)	-25 … +85 °C
Protection type	IP20
Pollution degree	2 per IEC 61131-2
Operating altitude	0 … 2000 m / 0 … 6562 ft
Mounting position	Horizontal left, horizontal right, horizontal top, horizontal bottom, vertical top and vertical bottom
Relative humidity (without condensation)	95 %
Vibration resistance	4g per IEC 60068-2-6
Shock resistance	15g per IEC 60068-2-27
EMC immunity to interference	per EN 61000-6-2, marine applications
EMC emission of interference	per EN 61000-6-3, marine applications
Exposure to pollutants	per IEC 60068-2-42 and IEC 60068-2-43
Permissible H_2S contaminant concentration at a relative humidity 75 %	10 ppm
Permissible SO_2 contaminant concentration at a relative humidity 75 %	25 ppm

Commercial data

Product Group	15 (I/O System)
PU (SPU)	1 pcs
Packaging type	Box
Country of origin	DE
GTIN	4045454725532
Customs tariff number	85389099990

Continued on next page

Product Classification

UNSPSC	32151705
ETIM 9.0	EC001599
ETIM 10.0	EC001599
ECCN	NO US CLASSIFICATION

Environmental Product Compliance

CAS-No.	1303-86-2 1317-36-8 7439-92-1
REACH Candidate List Substance	Diboron trioxide Lead Lead monoxide
RoHS Compliance Status	Compliant,With Exemption
RoHS Exemption	6(c) 7(a) 7(c)-I 7(c)-II
SCIP notification number (Austria)	2a239591-bd21-4dcf-ad44-aa133fd632ec
SCIP notification number (Belgium)	caed6a3c-d43e-48a9-8c5b-cbdd36302921
SCIP notification number (Bulgaria)	efce4914-2a6b-4272-914c-49f5bd245c34
SCIP notification number (Czech Republic)	ba99738d-70c7-40ef-a58d-5ce1b6c44c12
SCIP notification number (Denmark)	242f35ef-1631-48f8-92dc-4bbb4a6f2be9
SCIP notification number (Finland)	3289bfe7-27f4-4a4a-bb33-98ffc547d33b
SCIP notification number (France)	99c3910d-1f2a-425a-aba7-5a5a668ad948
SCIP notification number (Germany)	179a190c-c50a-4435-8bff-002aa1961681
SCIP notification number (Hungary)	1804c544-4aa8-4a60-801e-7e904eb0bca0
SCIP notification number (Italy)	3957ac6d-4b92-441e-b521-75e065e484a8
SCIP notification number (Netherlands)	524614ab-47cd-49dd-80bd-65f7ba9204e6
SCIP notification number (Poland)	f95aa432-fa87-4e68-ac0b-f93183e55beb
SCIP notification number (Romania)	54304629-0e14-4aac-a480-9d935947784e
SCIP notification number (Sweden)	2de901ee-f633-43a5-b3d3-96589416b697

Approvals / Certificates

General approvals

Approval	Standard	Certificate Name
EAC GZO Almaty Standart	TP TC 020/2011	EAC CoC 03083
KC National Radio Research Agency	Article 58-2, Clause 3	MSIP-REM-W43-DIM750
UL Underwriters Laboratories Inc. (ORDINARY LOCATIONS)	UL 508	E175199

Declarations of conformity and manufacturer's declarations

Approval	Standard	Certificate Name
EU-Ex-Declaration of Conformity WAGO GmbH & Co. KG	-	-
UK-Ex-Declaration of Conformity WAGO GmbH & Co. KG	-	-

Continued on next page

Approvals for marine applications

Approval	Standard	Certificate Name
ABS American Bureau of Shipping	-	25-0415412
BV Bureau Veritas S.A.	-	13453/E0 BV
DNV DNV GL SE	DNV-CG-0339,Aug.2021	TAA0000194
KR Korean Register of Shipping	-	KR HMB05880-AC001
LR Lloyds Register EMEA	-	LR22180952TA
PRS Polski Rejestr Statków	-	TE/1101/880590/23
RINA RINA Germany GmbH	-	ELE343521XG001

Approvals for hazardous areas

Approval	Standard	Certificate Name
AEx UL International Germany GmbH	UL 60079	E480271
ATEX TUEV Nord Cert GmbH	EN 60079	TUEV12ATEX106032X (Ex ec[iaGa] IIC T4 Gc, [Ex iaDa] IIIC, [Ex iaMa] I)
CCC CNEX	CNCA-C23-01	2020312310000211 (Ex ec [iaGa] IIC T4 Gc, [Ex iaDa] II-IC, [Ex iaMa] I)
IECEx TUEV Nord Cert GmbH	IEC 60079	IECEx TUN12.0039X (Ex ec [iaGa] IIC T4 Gc, [Ex iaDa] II-IC, [Ex iaMa] I)
INMETRO TÜV Rheinland do Brasil Ltda.	-	TÜV_14.1911_X
UKEx Element Materials Technology UK	-	EMA21UKEX0069X
UL Underwriters Laboratories Inc. (HAZARDOUS LOCATIONS)	UL 121201	E198726

Downloads

Environmental Product Compliance

Compliance Search

Environmental Product Compliance 750-435

Documentation

Manual

System Manual Series 750/753			
Product Manual 1-Channel, NAMUR Ex i	2480581515 | 5 | en-US | 2026-04-20 12:55 23.04.2026	pdf 1095.79 KB	

System Description

750/753 Series I/O-System – General Product Information	pdf 953.35 KB	
Overview on WAGO-I/O-SYSTEM 750 approvals	pdf 770.48 KB	
Ex i Overview	pdf 442.07 KB	

Bid Text			
750-435	19.02.2019	xml 6.24 KB	⬇
750-435	06.10.2017	doc 30.50 KB	⬇

Instruction Leaflet			
CCC Ex (Additional information)	26.04.2023	pdf 143.96 KB	⬇

CAD/CAE-Data

CAD data	
2D/3D Models 750-435	⬇

CAE data	
EPLAN Data Portal 750-435	⬇
WSCAD Universe 750-435	⬇
ZUKEN Portal 750-435	⬇

Device Files

Device Driver			
WAGO USB Service Kabel Treiber / Serie 750 und 857	6.5.3.0 10.09.2014	zip 4721.96 KB	⬇

1 Compatible Products

1.1 Optional Accessories

1.1.1 DIN-rail

1.1.1.1 Mounting accessories



Item No.: 210-196
Aluminum carrier rail; 35 x 8.2 mm; 1.6 mm thick; 2 m long; unslotted; similar to EN 60715; silver-colored



Item No.: 210-198
Copper carrier rail; 35 x 15 mm; 2.3 mm thick; 2 m long; unslotted; according to EN 60715; copper-colored



Item No.: 210-197
Steel carrier rail; 35 x 15 mm; 1.5 mm thick; 2 m long; slotted; similar to EN 60715; silver-colored



Item No.: 210-114
Steel carrier rail; 35 x 15 mm; 1.5 mm thick; 2 m long; unslotted; similar to EN 60715; silver-colored



Item No.: 210-118
Steel carrier rail; 35 x 15 mm; 2.3 mm thick; 2 m long; unslotted; according to EN 60715; silver-colored



Item No.: 210-112
Steel carrier rail; 35 x 7.5 mm; 1 mm thick; 2 m long; slotted; according to EN 60715; "Hole width 25 mm; silver-colored



Item No.: 210-113
Steel carrier rail; 35 x 7.5 mm; 1 mm thick; 2 m long; unslotted; according to EN 60715; silver-colored

1.1.2 Marking

1.1.2.1 Group marker carrier



Item No.: 750-107
Group marker carrier

1.1.2.2 Marker

Item No.: 2009-145/000-006
Mini-WSB Inline; for Smart Printer; 1700 pieces on roll; stretchable 5 - 5.2 mm; plain; snap-on type; blue

Item No.: 2009-145/000-007
Mini-WSB Inline; for Smart Printer; 1700 pieces on roll; stretchable 5 - 5.2 mm; plain; snap-on type; gray

Item No.: 2009-145/000-023
Mini-WSB Inline; for Smart Printer; 1700 pieces on roll; stretchable 5 - 5.2 mm; plain; snap-on type; green

Item No.: 2009-145/000-012
Mini-WSB Inline; for Smart Printer; 1700 pieces on roll; stretchable 5 - 5.2 mm; plain; snap-on type; orange

Item No.: 2009-145/000-005
Mini-WSB Inline; for Smart Printer; 1700 pieces on roll; stretchable 5 - 5.2 mm; plain; snap-on type; red

Item No.: 2009-145/000-024
Mini-WSB Inline; for Smart Printer; 1700 pieces on roll; stretchable 5 - 5.2 mm; plain; snap-on type; violet

Item No.: 2009-145
Mini-WSB Inline; for Smart Printer; 1700 pieces on roll; stretchable 5 - 5.2 mm; plain; snap-on type; white

Item No.: 2009-145/000-002
Mini-WSB Inline; for Smart Printer; 1700 pieces on roll; stretchable 5 - 5.2 mm; plain; snap-on type; yellow

Item No.: 248-501/000-006
Mini-WSB marking card; as card; not stretchable; plain; snap-on type; blue

Item No.: 248-501/000-007
Mini-WSB marking card; as card; not stretchable; plain; snap-on type; gray

Item No.: 248-501/000-023
Mini-WSB marking card; as card; not stretchable; plain; snap-on type; green

Item No.: 248-501/000-017
Mini-WSB marking card; as card; not stretchable; plain; snap-on type; light green

Item No.: 248-501/000-012
Mini-WSB marking card; as card; not stretchable; plain; snap-on type; orange

Item No.: 248-501/000-005
Mini-WSB marking card; as card; not stretchable; plain; snap-on type; red

Item No.: 248-501/000-024
Mini-WSB marking card; as card; not stretchable; plain; snap-on type; violet

Item No.: 248-501
Mini-WSB marking card; as card; not stretchable; plain; snap-on type; white

Item No.: 248-501/000-002
Mini-WSB marking card; as card; not stretchable; plain; snap-on type; yellow

1.1.2.3 Marker carrier



Item No.: 750-103
Group marker carrier

1.1.3 Sensors

1.1.3.1 Component module with a resistor



Item No.: 288-936
Component module with resistor; 2,50 mm²

1.1.4 Shield termination

1.1.4.1 Shield clamping saddles



Item No.: 790-108
Shield clamping saddle; 11 mm wide; diameter of compatible conductor; 3 … 8 mm



Item No.: 790-208
Shield clamping saddle; 12.4 mm wide; 3 … 8 mm



Item No.: 790-116
Shield clamping saddle; 19 mm wide; diameter of compatible conductor; 7 … 16 mm



Item No.: 790-216
Shield clamping saddle; 21.8 mm wide; 6 … 16 mm



Item No.: 790-124
Shield clamping saddle; 27 mm wide; diameter of compatible conductor; 6 … 24 mm



Item No.: 790-220
Shield clamping saddle; 30 mm wide; 6 … 20 mm



Item No.: 790-140
Shield clamping saddle; diameter of compatible conductor

1.1.5 Supply module

1.1.5.1 Supply module



Item No.: 750-606
Power Supply; 24 VDC; Diagnostics; Intrinsically safe



Item No.: 750-625/000-001
Power Supply; 24 VDC; Intrinsically safe