Data Sheet | Item Number: 750-438

2-channel digital input; NAMUR; Intrinsically safe

https://www.wago.com/750-438



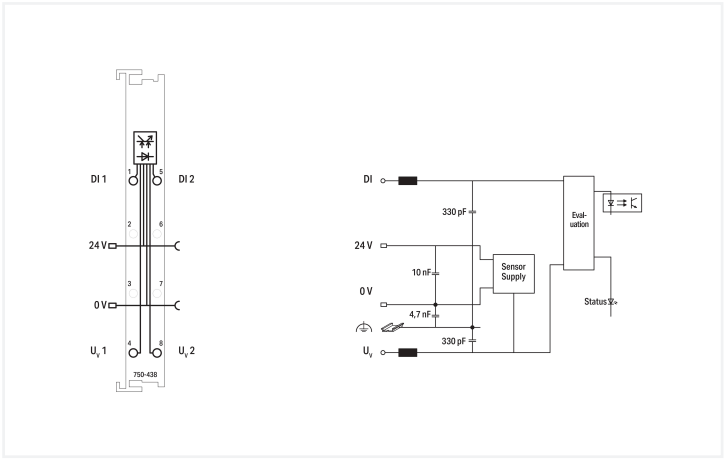

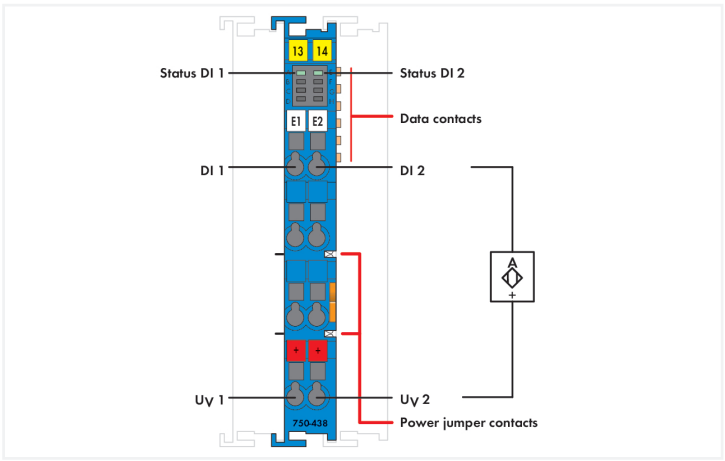

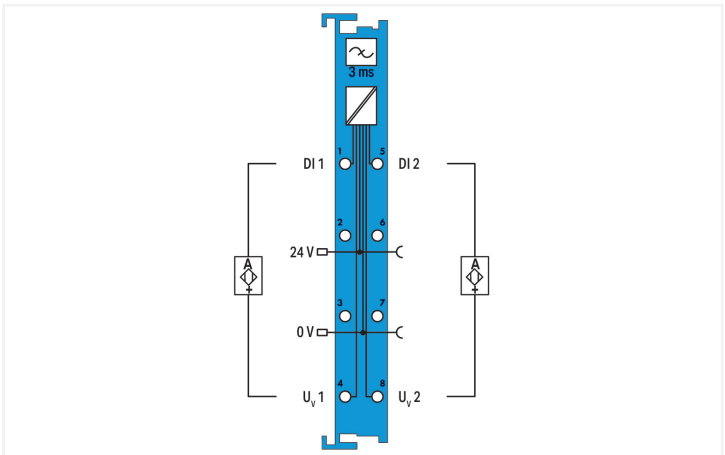

This digital input module records binary signals from sensors operating in Zone 0+1 hazardous areas.
NAMUR sensors, optocouplers, mechanical contacts or other actuating elements can also be connected via intrinsically safe devices.
The WAGO I/O System 750/753 must be installed either in Zone 2 or in a non-hazardous area. Each sensor is supplied with a short-circuit-protected voltage of 8.2 V.
Indicators:

- Green LED (signal on)

Field and system levels are electrically isolated.

Notes

Note	The digital input module must only be operated with a 24 VDC Ex i power supply! General information on explosion protection, including installation regulations, can be found in the WAGO I/O System 750/753 manuals!

Technical data

Item description	2-Channel Digital Input; NAMUR
Number of digital inputs	2
Total number of channels (module)	2
Signal type	NAMUR
Signal current (0) NAMUR	≤1.2 mA
Signal current (1) NAMUR	≥2.1 mA
Sensor connection	2 x (2-wire)
Input characteristic	high-side switching
Input filter	3 ms
Sensor supply	8.2 VDC
Input pulse length	≥5 ms
Input pulse separation	≥3 ms
Open-circuit voltage	8.2 V
Short-circuit current	≤ 8.2 mA
Switching hysteresis	0.2 mA
Input resistance	1000 Ω
Intrinsically safe Ex i	Yes
Input data width (internal) max.	2 bits
Supply voltage (system)	5 VDC; via data contacts
Current consumption (system supply)	2.5 mA
Supply voltage (field)	24 VDC; (Ex i power supply: U_o = max. 26.8 V); via power jumper contacts (supply via blade contact; distribution via spring contact)
Current consumption, field supply (module with no external load)	16 mA
Power consumption $P_{max.}$	0.4 W
Power loss P_l	0.27 W
Isolation	300 VAC system/supply
Number of incoming power jumper contacts	2
Number of outgoing power jumper contacts	2
Current carrying capacity (power jumper contacts)	1 A
Indicators	LED (A, E) green: Status DI 1, DI 2

Explosion protection

Identification	**ATEX:** II 3 (1) G Ex ec [ia Ga] IIC T4 Gc; II (1) D [Ex ia Da] IIIC; I (M1) [Ex ia Ma] I **IECEx/INMETRO:** Ex ec [ia Ga] IIC T4 Gc; [Ex ia Da] IIIC; [Ex ia Ma] I **cULus (Zone classified):** Cl I Zn 2 AEx nA [ia Ga] IIC T4 Gc; Cl I Zn 2 AEx nA [ia IIIC] IIC T4 Gc; Ex nA [ia Ga] IIC T4 Gc X; Ex nA [ia IIIC] IIC T4 Gc X **cULus (Devision classified):** Class I, Div. 2, Group A B C D, T4
Ex standard	EN IEC 60079-0, -7, -11
Safety-relevant data (circuit)	U_o = 12 V; I_o = 13.5 mA; P_o = 40.5 mW; linear characteristic curve
Reactances Ex ia IIC	L_o = 190 mH; C_o = 1.4 µF
Reactances Ex ia IIB	L_o = 600 mH; C_o = 9 µF
Reactances Ex ia IIA	L_o = 1 H; C_o = 36 µF
Reactances Ex ia I	L_o = 1 H; C_o = 38 µF
Reactances (note)	Reactances without accounting for the concurrence of capacitance (C_o) and inductance (L_o)

Continued on next page

Connection Data

Connection technology: I/O	4 x CAGE CLAMP®
Connectable conductor materials	Copper
Connection type	Inputs/outputs
Solid conductor	0.08 … 2.5 mm² / 28 … 14 AWG
Fine-stranded conductor	0.08 … 2.5 mm² / 28 … 14 AWG
Strip length	8 … 9 mm / 0.31 … 0.35 inches

Physical data

Width	12 mm / 0.472 inches
Height	100 mm / 3.937 inches
Depth	67.8 mm / 2.669 inches
Depth from upper-edge of DIN-rail	60.6 mm / 2.386 inches

Mechanical data

Mounting type	DIN-35 rail

Material data

Housing material	Polycarbonate; polyamide 6.6
Fire load	0.886 MJ
Weight	44.1 g
Conformity marking	CE

Environmental requirements

Ambient temperature (operation)	0 … +55 °C
Ambient temperature (storage)	-25 … +85 °C
Protection type	IP20
Pollution degree	2 per IEC 61131-2
Operating altitude	0 … 2000 m / 0 … 6562 ft
Mounting position	Horizontal left, horizontal right, horizontal top, horizontal bottom, vertical top and vertical bottom
Relative humidity (without condensation)	95 %
Vibration resistance	4g per IEC 60068-2-6
Shock resistance	15g per IEC 60068-2-27
EMC immunity to interference	per EN 61000-6-2, marine applications
EMC emission of interference	per EN 61000-6-3, marine applications
Exposure to pollutants	per IEC 60068-2-42 and IEC 60068-2-43
Permissible H_2S contaminant concentration at a relative humidity 75 %	10 ppm
Permissible SO_2 contaminant concentration at a relative humidity 75 %	25 ppm

Commercial data

Product Group	15 (I/O System)
PU (SPU)	1 pcs
Packaging type	Box
Country of origin	DE
GTIN	4045454725525
Customs tariff number	85176200000

Continued on next page

Product Classification

UNSPSC	32151705
eCl@ss 10.0	27-24-26-04
eCl@ss 9.0	27-24-26-04
ETIM 9.0	EC001599
ETIM 10.0	EC001599
ECCN	NO US CLASSIFICATION

Environmental Product Compliance

CAS-No.	1303-86-2 1317-36-8 7439-92-1
REACH Candidate List Substance	Diboron trioxide Lead Lead monoxide
RoHS Compliance Status	Compliant,With Exemption
RoHS Exemption	6(c) 7(a) 7(c)-I 7(c)-II
SCIP notification number (Austria)	2e881213-5d48-42e5-b089-c0bc8feeb830
SCIP notification number (Belgium)	7f5cda66-bae8-45d4-99be-4c8bf82b8719
SCIP notification number (Bulgaria)	a006b846-32ea-4a4b-b020-423b59a70af6
SCIP notification number (Czech Republic)	a0c4088e-2a56-4bb5-b35d-c1a879757654
SCIP notification number (Denmark)	266a171e-1682-4cf9-941c-65c6e91d93a5
SCIP notification number (Finland)	c2870d4e-763a-456d-baab-20e8882d1f3d
SCIP notification number (France)	62fee0f7-d05a-4ad7-9448-a09a4a57a708
SCIP notification number (Germany)	22a209d7-87fc-4d51-814a-39506fa84040
SCIP notification number (Hungary)	6ab9fa73-1997-4a0a-beb5-883e8fc28960
SCIP notification number (Italy)	5daa5544-8b46-45ae-936f-3f7b548ea68b
SCIP notification number (Netherlands)	5acce4f3-f366-45b8-b331-953da14ce73a
SCIP notification number (Poland)	e94fed5d-7868-42fa-a949-706526904ad5
SCIP notification number (Romania)	ac2ddcca-2db4-4f18-95dd-a6d9ac278146
SCIP notification number (Sweden)	1526fa2f-851b-4482-9b36-36bb138fd1fb

Approvals / Certificates

General approvals

Approval	Standard	Certificate Name
EAC GZO Almaty Standart	TP TC 020/2011	EAC CoC 03083
KC National Radio Research Agency	Article 58-2, Clause 3	MSIP-REM-W43-DIM750
UL Underwriters Laboratories Inc. (ORDINARY LOCATIONS)	UL 508	E175199

Declarations of conformity and manufacturer's declarations

Approval	Standard	Certificate Name
EU-Ex-Declaration of Conformity WAGO GmbH & Co. KG	-	-
UK-Ex-Declaration of Conformity WAGO GmbH & Co. KG	-	-

Continued on next page

Approvals for marine applications

Approval	Standard	Certificate Name
ABS American Bureau of Shipping	-	25-0415412
BV Bureau Veritas S.A.	-	30389/C0 BV
DNV DNV GL SE	DNV-CG-0339,Aug.2021	TAA0000194
KR Korean Register of Shipping	-	KR HMB05880-AC001
LR Lloyds Register EMEA	-	LR22180952TA
PRS Polski Rejestr Statków	-	TE/1101/880590/23
RINA RINA Germany GmbH	-	ELE343521XG001

Approvals for hazardous areas

Approval	Standard	Certificate Name
AEx UL International Germany GmbH	UL 60079	E480271
ATEX TUEV Nord Cert GmbH	EN 60079	TUEV12ATEX106032X (Ex ec[iaGa] IIC T4 Gc, [Ex iaDa] IIIC, [Ex iaMa] I)
CCC CNEX	CNCA-C23-01	2020312310000211 (Ex ec [iaGa] IIC T4 Gc, [Ex iaDa] II-IC, [Ex iaMa] I)
IECEx TUEV Nord Cert GmbH	IEC 60079	IECEx TUN12.0039X (Ex ec [iaGa] IIC T4 Gc, [Ex iaDa] II-IC, [Ex iaMa] I)
INMETRO TÜV Rheinland do Brasil Ltda.	-	TÜV_14.1911_X
UKEx Element Materials Technology UK	-	EMA21UKEX0069X
UL Underwriters Laboratories Inc. (HAZARDOUS LOCATIONS)	UL 121201	E198726

Downloads

Environmental Product Compliance

Compliance Search

Environmental Product Compliance 750-438	

Documentation

Manual

Product Manual 2-Channel, NAMUR Ex i	2481629707 | 4 | en-US | 2025-06-03 08:54 14.11.2025	pdf 1071.18 KB	
System Manual Series 750/753			

System Description

750/753 Series I/O-System – General Product Information	pdf 953.35 KB	
Overview on WAGO-I/O-SYSTEM 750 approvals	pdf 770.48 KB	
Ex i Overview	pdf 442.07 KB	

Continued on next page

Bid Text			
750-438	19.02.2019	xml 6.02 KB	
750-438	06.10.2017	doc 31.00 KB	

Instruction Leaflet			
CCC Ex (Additional information)	26.04.2023	pdf 143.96 KB	

CAD/CAE-Data

CAD data	
2D/3D Models 750-438	

CAE data	
EPLAN Data Portal 750-438	
WSCAD Universe 750-438	
ZUKEN Portal 750-438	

Device Files

Device Driver			
WAGO USB Service Kabel Treiber / Serie 750 und 857	6.5.3.0 10.09.2014	zip 4721.96 KB	

1 Compatible Products

1.1 Optional Accessories

1.1.1 DIN-rail

1.1.1.1 Mounting accessories



Item No.: 210-196
Aluminum carrier rail; 35 x 8.2 mm; 1.6 mm thick; 2 m long; unslotted; similar to EN 60715; silver-colored



Item No.: 210-198
Copper carrier rail; 35 x 15 mm; 2.3 mm thick; 2 m long; unslotted; according to EN 60715; copper-colored



Item No.: 210-197
Steel carrier rail; 35 x 15 mm; 1.5 mm thick; 2 m long; slotted; similar to EN 60715; silver-colored



Item No.: 210-114
Steel carrier rail; 35 x 15 mm; 1.5 mm thick; 2 m long; unslotted; similar to EN 60715; silver-colored



Item No.: 210-118
Steel carrier rail; 35 x 15 mm; 2.3 mm thick; 2 m long; unslotted; according to EN 60715; silver-colored



Item No.: 210-112
Steel carrier rail; 35 x 7.5 mm; 1 mm thick; 2 m long; slotted; according to EN 60715; "Hole width 25 mm; silver-colored



Item No.: 210-113
Steel carrier rail; 35 x 7.5 mm; 1 mm thick; 2 m long; unslotted; according to EN 60715; silver-colored

1.1.2 Marking

1.1.2.1 Group marker carrier



Item No.: 750-107
Group marker carrier

Continued on next page

1.1.2.2 Marker



Item No.: 2009-145/000-006
Mini-WSB Inline; for Smart Printer; 1700 pieces on roll; stretchable 5 - 5.2 mm; plain; snap-on type; blue



Item No.: 2009-145/000-007
Mini-WSB Inline; for Smart Printer; 1700 pieces on roll; stretchable 5 - 5.2 mm; plain; snap-on type; gray



Item No.: 2009-145/000-023
Mini-WSB Inline; for Smart Printer; 1700 pieces on roll; stretchable 5 - 5.2 mm; plain; snap-on type; green



Item No.: 2009-145/000-012
Mini-WSB Inline; for Smart Printer; 1700 pieces on roll; stretchable 5 - 5.2 mm; plain; snap-on type; orange



Item No.: 2009-145/000-005
Mini-WSB Inline; for Smart Printer; 1700 pieces on roll; stretchable 5 - 5.2 mm; plain; snap-on type; red



Item No.: 2009-145/000-024
Mini-WSB Inline; for Smart Printer; 1700 pieces on roll; stretchable 5 - 5.2 mm; plain; snap-on type; violet



Item No.: 2009-145
Mini-WSB Inline; for Smart Printer; 1700 pieces on roll; stretchable 5 - 5.2 mm; plain; snap-on type; white



Item No.: 2009-145/000-002
Mini-WSB Inline; for Smart Printer; 1700 pieces on roll; stretchable 5 - 5.2 mm; plain; snap-on type; yellow



Item No.: 248-501/000-006
Mini-WSB marking card; as card; not stretchable; plain; snap-on type; blue



Item No.: 248-501/000-007
Mini-WSB marking card; as card; not stretchable; plain; snap-on type; gray



Item No.: 248-501/000-023
Mini-WSB marking card; as card; not stretchable; plain; snap-on type; green



Item No.: 248-501/000-017
Mini-WSB marking card; as card; not stretchable; plain; snap-on type; light green



Item No.: 248-501/000-012
Mini-WSB marking card; as card; not stretchable; plain; snap-on type; orange



Item No.: 248-501/000-005
Mini-WSB marking card; as card; not stretchable; plain; snap-on type; red



Item No.: 248-501/000-024
Mini-WSB marking card; as card; not stretchable; plain; snap-on type; violet



Item No.: 248-501
Mini-WSB marking card; as card; not stretchable; plain; snap-on type; white



Item No.: 248-501/000-002
Mini-WSB marking card; as card; not stretchable; plain; snap-on type; yellow

1.1.2.3 Marker carrier



Item No.: 750-103
Group marker carrier

1.1.3 Shield termination

1.1.3.1 Shield clamping saddles



Item No.: 790-108
Shield clamping saddle; 11 mm wide; diameter of compatible conductor; 3 … 8 mm



Item No.: 790-208
Shield clamping saddle; 12.4 mm wide; 3 … 8 mm



Item No.: 790-116
Shield clamping saddle; 19 mm wide; diameter of compatible conductor; 7 … 16 mm



Item No.: 790-216
Shield clamping saddle; 21.8 mm wide; 6 … 16 mm



Item No.: 790-124
Shield clamping saddle; 27 mm wide; diameter of compatible conductor; 6 … 24 mm



Item No.: 790-220
Shield clamping saddle; 30 mm wide; 6 … 20 mm



Item No.: 790-140
Shield clamping saddle; diameter of compatible conductor

1.1.4 Supply module

1.1.4.1 Supply module



Item No.: 750-606
Power Supply; 24 VDC; Diagnostics; Intrinsically safe



Item No.: 750-625/000-001
Power Supply; 24 VDC; Intrinsically safe