Data Sheet | Item Number: 750-439/040-000

8-channel digital input; NAMUR; Intrinsically safe; Extreme

https://www.wago.com/750-439/040-000

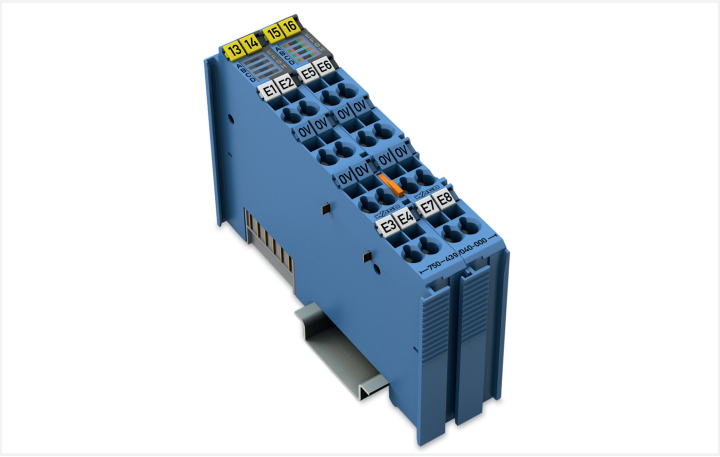

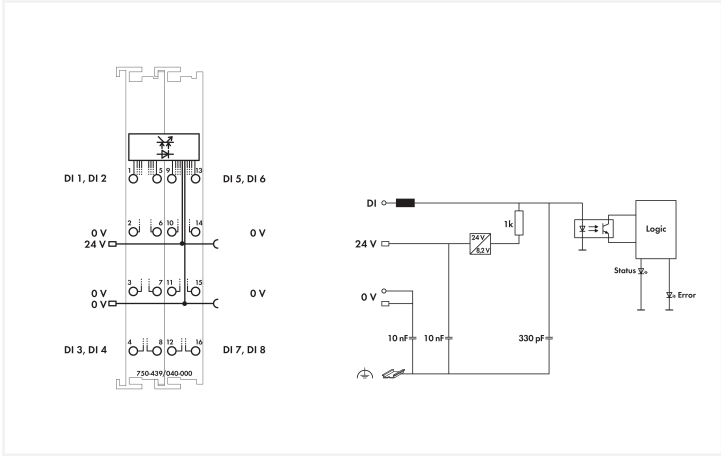

Color: blue

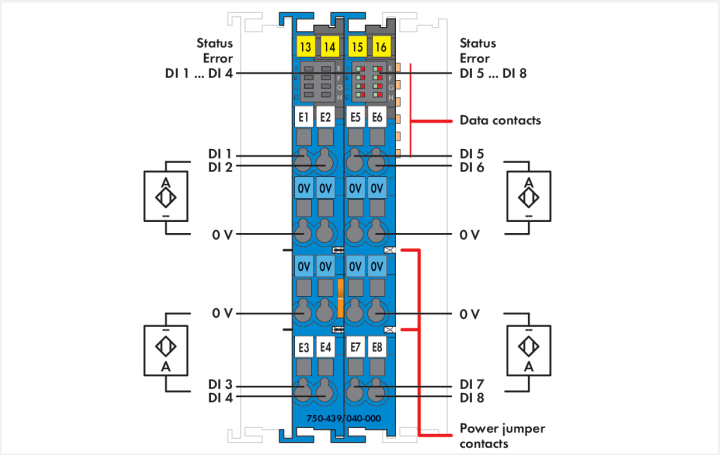

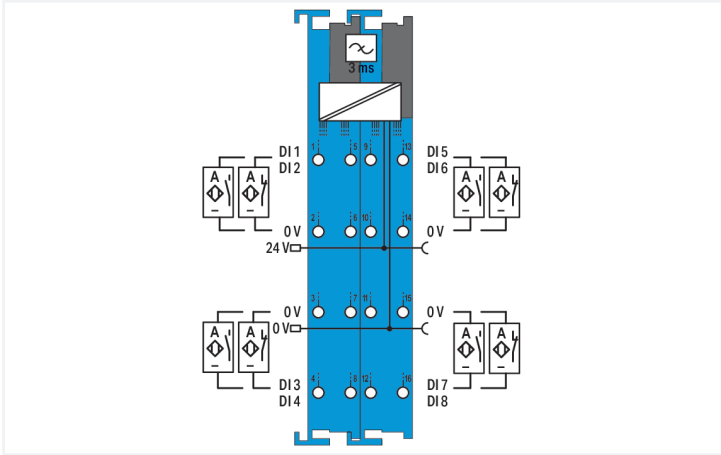

This digital input module records binary signals from sensors operating in Zone 0+1 hazardous areas, permitting channel-by-channel short circuit and wire-break diagnostics. NAMUR sensors, optocouplers, mechanical contacts (LED diagnostics can be turned off via control byte) or other actuating elements can be connected via intrinsically safe devices.
The WAGO I/O System 750 XTR must be installed either in Zone 2 or in a non-hazardous area. Each sensor is supplied with a short-circuit-protected voltage of 8.2 V.
Indicators:

- Green LED (signal ON)
- Red LED (short circuit)
- Red flashing LED (wire-break)

Field and system levels are electrically isolated.
The device is ideal for operation in extreme environments thanks to:

- An extended temperature range
- Greater immunity to impulse voltages and electromagnetic interference
- Higher vibration and shock resistance

Notes

Note	The digital input module must only be operated via 24 VDC Ex i XTR power supply (750-606/040-000)! General information on explosion protection, including installation regulations, can be found in the WAGO I/O System 750 XTR manuals!

Technical data

Item description	8-Channel Digital Input; NAMUR; Intrinsically safe
Number of digital inputs	8
Total number of channels (module)	8
Signal type	NAMUR
Signal current (0) NAMUR	≤1.2 mA
Signal current (1) NAMUR	≥2.1 mA
Sensor connection	8 x (2-wire)
Input characteristic	high-side switching
Input filter	3 ms
Sensor supply	8.2 VDC
Input pulse length	≥5 ms
Input pulse separation	≥3 ms
Open-circuit voltage	8.2 V
Short-circuit current	≤ 8.2 mA (± 0.2 mA)
Switching hysteresis	0.2 mA
Input resistance	1000 Ω
Intrinsically safe Ex i	Yes
Diagnostics	Short circuit, wire break
Input data width (internal) max.	16 bits
Output data width (internal) max.	16 bits
Supply voltage (system)	5 VDC; via data contacts
Current consumption (system supply)	56 mA
Supply voltage (field)	24 VDC; (Ex i XTR power supply: U_o = max. 26.8); via power jumper contacts (supply via blade contact; distribution via spring contact)
Current consumption, field supply (module with no external load)	11 mA
Power consumption $P_{max.}$	1.2 W
Power loss P_l	0.54 W
Isolation	300 VAC system/supply
Rated impulse withstand voltage	1 kV; Rated surge voltage between intrinsically safe and non-intrinsically safe circuits: 1.5 kV (EN 60079-11)
Number of incoming power jumper contacts	2
Number of outgoing power jumper contacts	2
Current carrying capacity (power jumper contacts)	1 A
Indicators	LED (A-H) green/red: Status/error DI 1 … DI 8

Explosion protection

Identification	**ATEX:** II 3 (1) G Ex ec [ia Ga] IIC T4 Gc; II (1) D [Ex ia Da] IIIC; I (M1) [Ex ia Ma] I **IECEx/INMETRO:** Ex ec [ia Ga] IIC T4 Gc; [Ex ia Da] IIIC; [Ex ia Ma] I **cULus (Devision classified):** Class I, Div. 2, Group A B C D, T4
Ex standard	EN/IEC 60079-0, -7, -11
Safety-relevant data (circuit)	U_o = 11.76 V; I_o = 12.48 mA; P_o = 36.67 mW; linear characteristic curve
Reactances Ex ia IIC	L_o = 100 mH; C_o = 1.5 µF
Reactances Ex ia IIB	L_o = 100 mH; C_o = 9.9 µF
Reactances Ex ia IIA	L_o = 100 mH; C_o = 39 µF
Reactances Ex ia I	L_o = 100 mH; C_o = 38 µF
Reactances (note)	Reactances without accounting for the concurrence of capacitance (C_o) and inductance (L_o)

Continued on next page

Connection Data

Connection technology: I/O	16 x CAGE CLAMP®
Connectable conductor materials	Copper
Connection type	Inputs/outputs
Solid conductor	0.25 … 2.5 mm² / 24 … 14 AWG
Fine-stranded conductor	0.25 … 2.5 mm² / 24 … 14 AWG
Strip length	8 … 9 mm / 0.31 … 0.35 inches

Physical data

Width	24 mm / 0.945 inches
Height	100 mm / 3.937 inches
Depth	67.8 mm / 2.669 inches
Depth from upper-edge of DIN-rail	60.6 mm / 2.386 inches

Mechanical data

Mounting type	DIN-35 rail

Material data

Color	blue
Housing material	Polycarbonate; polyamide 6.6
Fire load	1.585 MJ
Weight	93.8 g
Conformity marking	CE

Environmental requirements

Ambient temperature (operation)	-40 … +70 °C
Ambient temperature (storage)	-40 … +85 °C
Ambient temperature (installation)	-20 … +70 °C
Protection type	IP20
Pollution degree	2 per IEC 61131-2
Operating altitude	without temperature derating: 0 … 2000 m; with temperature derating: 2000 … 5000 m (0.5 K/100 m); 5000 m (max.)
Mounting position	Horizontal left, horizontal up, vertical top and vertical bottom
Relative humidity (without condensation)	95 %
Relative humidity (with condensation)	Short-term condensation per Class 3K7/IEC EN 60721-3-3 and E-DIN 40046-721-3 (except for wind-driven precipitation, water and ice formation)
Vibration resistance	Per IEC 60068-2-6 (acceleration: 5g), EN 60870-2-2, IEC 60721-3-1, -3
Shock resistance	per IEC 60068-2-27 (15g/11 ms/half-sine/1,000 shocks; 25g/6 ms/1,000 shocks), EN 61373
Corrosion Resistance	Conformal Coating: yes EN/IEC 60068-2-60: Method 4 ISA S71.04: G3 Group A
EMC immunity to interference	per EN 61000-6-1, -2, EN 61131-2, marine applications, EN 60255-26, EN 60870-2-1, EN 61850-3, IEC 61000-6-5, IEEE 1613, VDEW: 1994
EMC emission of interference	per EN 61000-6-3, -4, EN 61131-2, EN 60255-26, marine applications, EN 60870-2-1, EN 61850-3
Exposure to pollutants	per IEC 60068-2-42 and IEC 60068-2-43
Permissible H_2S contaminant concentration at a relative humidity 75 %	10 ppm
Permissible SO_2 contaminant concentration at a relative humidity 75 %	25 ppm

Continued on next page

Commercial data

PU (SPU)	1 pcs
Packaging type	Box
Country of origin	DE
GTIN	4055143649438
Customs tariff number	85176200000

Product Classification

UNSPSC	32151705
eCl@ss 10.0	27-24-26-04
eCl@ss 9.0	27-24-26-04
ETIM 9.0	EC001599
ETIM 10.0	EC001599
ECCN	NO US CLASSIFICATION

Environmental Product Compliance

CAS-No.	1303-86-2 1317-36-8 7439-92-1
REACH Candidate List Substance	Diboron trioxide Lead Lead monoxide
RoHS Compliance Status	Compliant,With Exemption
RoHS Exemption	6(c) 7(a) 7(c)-I 7(c)-II
SCIP notification number (Austria)	4b25589e-1a1f-4e4f-8aa5-ae53fcc796c8
SCIP notification number (Belgium)	754f4b36-3019-4307-81b2-e8dc6dcbb7bc
SCIP notification number (Bulgaria)	906f2450-7508-4d2a-87e8-b51778bc0927
SCIP notification number (Czech Republic)	77d8c957-822e-4359-b662-8e7185fbf900
SCIP notification number (Denmark)	f3cdf71f-986a-424b-a9a1-53e3ae1e5de8
SCIP notification number (Finland)	14553aa8-65d3-4d17-88ab-f1c2bc41e68c
SCIP notification number (France)	fc4853d8-7dfa-4d21-9061-d01358e49185
SCIP notification number (Germany)	44c64c42-b9e3-4ea1-b3c1-c8939e5132b1
SCIP notification number (Hungary)	31674adb-3080-4686-9480-57a5616fd7ca
SCIP notification number (Italy)	d01fd5d7-b59c-405e-8f8d-efcfd53f9de5
SCIP notification number (Netherlands)	525622d2-fa17-438e-8093-4c9f6ef5250a
SCIP notification number (Poland)	4a12c42e-c306-42dc-a319-777279d7d0bb
SCIP notification number (Romania)	808a02ba-32de-4866-9df1-08beb0ca094b
SCIP notification number (Sweden)	9ebbee69-5b9c-4b70-b1bf-ed78693a9462

Approvals / Certificates

General approvals

Approval	Standard	Certificate Name
EAC GZO Almaty Standart	TP TC 020/2011	EAC CoC 03083
UL Underwriters Laboratories Inc. (ORDINARY LOCATIONS)	-	E175199

Declarations of conformity and manufacturer's declarations

Approval	Standard	Certificate Name
EU-Ex-Declaration of Conformity WAGO GmbH & Co. KG	-	-
UK-Ex-Declaration of Conformity WAGO GmbH & Co. KG	-	-

Continued on next page

Approvals for marine applications

Approval	Standard	Certificate Name
ABS American Bureau of Shipping	-	22-2208829-PDA
DNV DNV GL SE	-	TAA00000Y7
LR Lloyds Register	-	LR22276776TA
PRS Polski Rejestr Statków	-	TE/1099/880590/23

Approvals for hazardous areas

Approval	Standard	Certificate Name
ATEX TUEV Nord Cert GmbH	EN 60079-0	TUEV_17_ATEX_196484X (Ex ec[iaGa] IIC T4 Gc, [Ex iaDa] IIIC, [Ex iaMa] I)
CCC CNEX	CNCA-C23-01	2020312310000212 (Ex ec [iaGa]IIC T4 Gc, [Ex ia Da]IIIC, [Ex ia Ma]I)
IECEx TUEV Nord Cert GmbH	IEC 60079-0	IECEx TUN 17.0005X (Ex ec [iaGa] IIC T4 Gc, [Ex iaDa] IIIC, [Ex iaMa] I)
UKEx Element Materials Technology UK	-	EMA21UKEX0043X
UL Underwriters Laboratories Inc. (HAZARDOUS LOCATIONS)	UL 121201	E198726

Downloads

Environmental Product Compliance

Compliance Search

Environmental Product Compliance 750-439/040-000	

Documentation

Manual

Product Manual NAMUR, Ex-i, 8-Channel Digital Input Module /XTR	V 1.1.0 11.05.2020	pdf 3124.07 KB	
System Manual Series 750/753			

System Description

Intrinsically Safe XTR Modules – General Product Information	pdf 214.93 KB	
Overview on WAGO-I/O-SYSTEM 750 approvals	pdf 770.48 KB	

Bid Text

750-439/040-000	08.02.2018	doc 35.50 KB	
750-439/040-000	19.02.2019	xml 9.03 KB	

Instruction Leaflet

CCC Ex (Additional information)	26.04.2023	pdf 143.50 KB	

Continued on next page

CAD/CAE-Data

CAD data

2D/3D Models
750-439/040-000

CAE data

EPLAN Data Portal
750-439/040-000

ZUKEN Portal
750-439/040-000

1 Compatible Products

1.1 Optional Accessories

1.1.1 DIN-rail

1.1.1.1 Mounting accessories



Item No.: 210-196
Aluminum carrier rail; 35 x 8.2 mm; 1.6 mm thick; 2 m long; unslotted; similar to EN 60715; silver-colored



Item No.: 210-198
Copper carrier rail; 35 x 15 mm; 2.3 mm thick; 2 m long; unslotted; according to EN 60715; copper-colored



Item No.: 210-197
Steel carrier rail; 35 x 15 mm; 1.5 mm thick; 2 m long; slotted; similar to EN 60715; silver-colored



Item No.: 210-114
Steel carrier rail; 35 x 15 mm; 1.5 mm thick; 2 m long; unslotted; similar to EN 60715; silver-colored



Item No.: 210-118
Steel carrier rail; 35 x 15 mm; 2.3 mm thick; 2 m long; unslotted; according to EN 60715; silver-colored



Item No.: 210-112
Steel carrier rail; 35 x 7.5 mm; 1 mm thick; 2 m long; slotted; according to EN 60715; "Hole width 25 mm; silver-colored



Item No.: 210-113
Steel carrier rail; 35 x 7.5 mm; 1 mm thick; 2 m long; unslotted; according to EN 60715; silver-colored

1.1.2 Marking

1.1.2.1 Group marker carrier



Item No.: 750-107
Group marker carrier

1.1.2.2 Marker



Item No.: 2009-145/000-006
Mini-WSB Inline; for Smart Printer; 1700 pieces on roll; stretchable 5 - 5.2 mm; plain; snap-on type; blue



Item No.: 2009-145/000-007
Mini-WSB Inline; for Smart Printer; 1700 pieces on roll; stretchable 5 - 5.2 mm; plain; snap-on type; gray



Item No.: 2009-145/000-023
Mini-WSB Inline; for Smart Printer; 1700 pieces on roll; stretchable 5 - 5.2 mm; plain; snap-on type; green



Item No.: 2009-145/000-012
Mini-WSB Inline; for Smart Printer; 1700 pieces on roll; stretchable 5 - 5.2 mm; plain; snap-on type; orange



Item No.: 2009-145/000-005
Mini-WSB Inline; for Smart Printer; 1700 pieces on roll; stretchable 5 - 5.2 mm; plain; snap-on type; red



Item No.: 2009-145/000-024
Mini-WSB Inline; for Smart Printer; 1700 pieces on roll; stretchable 5 - 5.2 mm; plain; snap-on type; violet



Item No.: 2009-145
Mini-WSB Inline; for Smart Printer; 1700 pieces on roll; stretchable 5 - 5.2 mm; plain; snap-on type; white



Item No.: 2009-145/000-002
Mini-WSB Inline; for Smart Printer; 1700 pieces on roll; stretchable 5 - 5.2 mm; plain; snap-on type; yellow



Item No.: 248-501/000-006
Mini-WSB marking card; as card; not stretchable; plain; snap-on type; blue



Item No.: 248-501/000-007
Mini-WSB marking card; as card; not stretchable; plain; snap-on type; gray



Item No.: 248-501/000-023
Mini-WSB marking card; as card; not stretchable; plain; snap-on type; green



Item No.: 248-501/000-017
Mini-WSB marking card; as card; not stretchable; plain; snap-on type; light green



Item No.: 248-501/000-012
Mini-WSB marking card; as card; not stretchable; plain; snap-on type; orange



Item No.: 248-501/000-005
Mini-WSB marking card; as card; not stretchable; plain; snap-on type; red



Item No.: 248-501/000-024
Mini-WSB marking card; as card; not stretchable; plain; snap-on type; violet



Item No.: 248-501
Mini-WSB marking card; as card; not stretchable; plain; snap-on type; white

Continued on next page

1.1.2.2 Marker



Item No.: 248-501/000-002
Mini-WSB marking card; as card; not stretchable; plain; snap-on type; yellow

1.1.2.3 Marker carrier



Item No.: 750-103
Group marker carrier

1.1.3 Power supply

1.1.3.1 Supply module



Item No.: 750-606/040-000
Power Supply; 24 VDC; Diagnostics; Intrinsically safe; Extreme

1.1.4 Shield termination

1.1.4.1 Shield clamping saddles



Item No.: 790-108
Shield clamping saddle; 11 mm wide; diameter of compatible conductor; 3 … 8 mm



Item No.: 790-208
Shield clamping saddle; 12.4 mm wide; 3 … 8 mm



Item No.: 790-116
Shield clamping saddle; 19 mm wide; diameter of compatible conductor; 7 … 16 mm



Item No.: 790-216
Shield clamping saddle; 21.8 mm wide; 6 … 16 mm



Item No.: 790-124
Shield clamping saddle; 27 mm wide; diameter of compatible conductor; 6 … 24 mm



Item No.: 790-220
Shield clamping saddle; 30 mm wide; 6 … 20 mm



Item No.: 790-140
Shield clamping saddle; diameter of compatible conductor