Data Sheet | Item Number: 750-451

8-channel analog input; Resistance measurement; Adjustable

https://www.wago.com/750-451



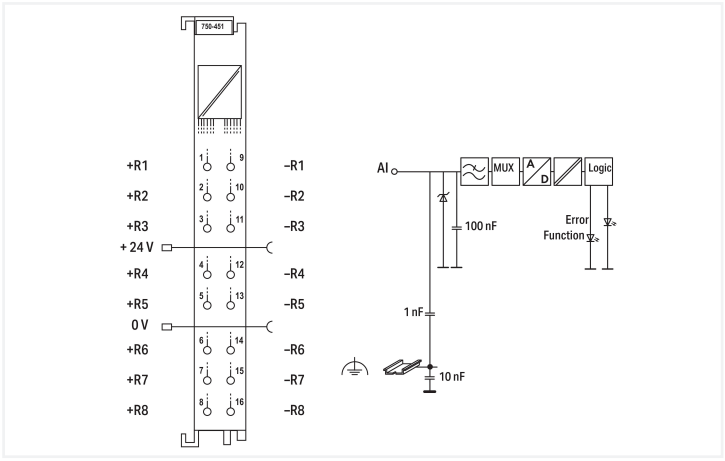

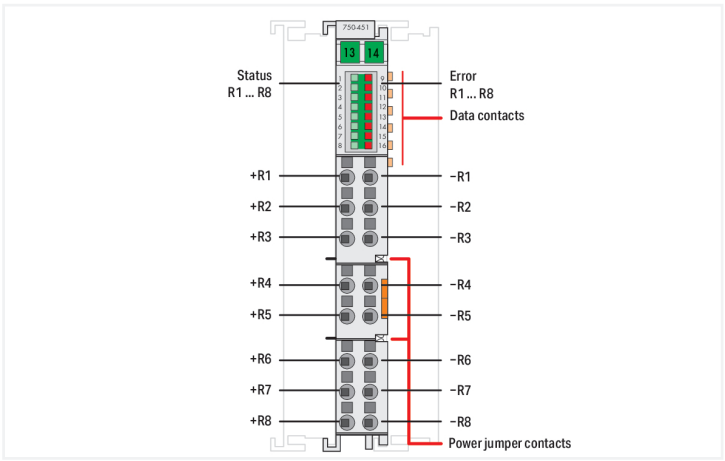

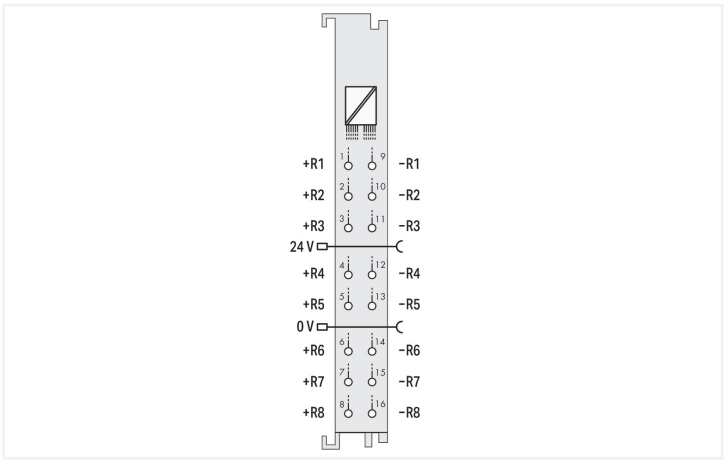

This analog input module directly connects to Pt or Ni resistance sensors.

Two-wire sensors can be connected.

The module automatically linearizes the entire temperature range. A sensor error (short circuit, wire break or out-of-measurement range) is indicated by a red LED. Unused channels can be deactivated.

The module can be configured via WAGO-I/O-CHECK or GSD files.

It features multiple setting options and high accuracy.

Technical data	
Number of analog inputs	8
Total number of channels (module)	8
Signal type	Resistance measurement Potentiometer positions
Signal type (configurable)	Yes
Sensor connection	8 x (2-wire)
Data width	8 x 16-bit data; 8 x 8-bit control/status (optional)
Resolution (over entire range)	0.1 °C (over the entire range); 0.01 °C (–50 … 150 °C; Pt1000, Ni1000)
Conversion time (typ.)	100 ms
Measurement error (25 °C)	≤ ±0.6 K (Pt100, Pt200, Pt500, Ni100, Ni120); ≤ ±0.2 K (Pt1000, Ni1000); ≤ ±0.3 Ω for resistance measurement

Technical data

Measuring current (typ.)	≤ 350 µA
Response time (max.)	3 s
Sensor types	Pt100; Configurable: Pt200, Pt500, Pt1000, Ni100, Ni120, Ni1000 (TK6180 + TK5000), Potentiometer: 10R ... 1k2, 10R ... 5k0
Temperature range	–200 … +850 °C (Pt100, Pt200, Pt500, Pt1000), –60 … +250 °C (Ni100, Ni1000), –80 … +260 °C (Ni120)
Configuration options	WAGO-I/O-*CHECK* CODESYS Library ***e!****COCKPIT*
Supply voltage (system)	5 VDC; via data contacts
Current consumption (system supply)	110 mA
Supply voltage (field)	24 VDC (-25 … +30 %); via power jumper contacts (power supply via blade contact; transmission (field side supply voltage only) via spring contact)
Isolation	500 V system/field
Indicators	LED (1-8) green: Status R1 … R8; LED (9-16) red: Error R1 … R8
Number of incoming power jumper contacts	2
Number of outgoing power jumper contacts	2

Connection Data

Connection technology: I/O	16 x Push-in CAGE CLAMP®
Connectable conductor materials	Copper
Connection type	Inputs/outputs
Solid conductor	0.08 … 1.5 mm² / 28 … 16 AWG
Fine-stranded conductor	0.25 … 1.5 mm² / 22 … 16 AWG
Strip length	8 … 9 mm / 0.31 … 0.35 inches

Physical data

Width	12 mm / 0.472 inches
Height	100 mm / 3.937 inches
Depth	69 mm / 2.717 inches
Depth from upper-edge of DIN-rail	61.8 mm / 2.433 inches

Mechanical data

Mounting type	DIN-35 rail
Pluggable connector	fixed

Material data

Housing material	Polycarbonate; polyamide 6.6
Fire load	0.819 MJ
Weight	48 g
Conformity marking	CE

Continued on next page

Environmental requirements

Ambient temperature (operation)	0 … +55 °C
Ambient temperature (storage)	-40 … +85 °C
Protection type	IP20
Pollution degree	2 per IEC 61131-2
Operating altitude	0 … 2000 m / 0 … 6562 ft
Mounting position	Horizontal left, horizontal right, horizontal top, horizontal bottom, vertical top and vertical bottom
Relative humidity (without condensation)	95 %
Vibration resistance	4g per IEC 60068-2-6
Shock resistance	15g per IEC 60068-2-27
EMC immunity to interference	per EN 61000-6-1; EN 61000-6-2
EMC emission of interference	per EN 61000-6-3
Exposure to pollutants	per IEC 60068-2-42 and IEC 60068-2-43
Permissible H_2S contaminant concentration at a relative humidity 75 %	10 ppm
Permissible SO_2 contaminant concentration at a relative humidity 75 %	25 ppm

Commercial data

PU (SPU)	1 pcs
Packaging type	Box
Country of origin	DE
GTIN	4017332258388
Customs tariff number	85437090990

Product Classification

UNSPSC	32151705
eCl@ss 10.0	27-24-26-01
eCl@ss 9.0	27-24-26-01
ETIM 9.0	EC001596
ETIM 10.0	EC001596
ECCN	NO US CLASSIFICATION

Environmental Product Compliance

CAS-No.	1303-86-2 1317-36-8 7439-92-1
REACH Candidate List Substance	Diboron trioxide Lead Lead monoxide
RoHS Compliance Status	Compliant,With Exemption
RoHS Exemption	6(c) 7(a) 7(c)-I 7(c)-II
SCIP notification number (Austria)	0485557f-27ea-4123-9a3b-de645cd5d37f
SCIP notification number (Belgium)	449cdf43-b314-4607-b4a5-d7c754149d26
SCIP notification number (Bulgaria)	5dfbbbbe-e64b-4e32-8108-9c9de8c6188e
SCIP notification number (Czech Republic)	681d2b62-e9c5-457e-9c2a-f0ebd137c142
SCIP notification number (Denmark)	3c0fe329-36bd-4923-91e4-6f31428c42d9
SCIP notification number (Finland)	e28d2b60-3243-4a30-9d8e-dce05b790b83
SCIP notification number (France)	097b8d33-b054-4d32-b059-22c365abd9e5
SCIP notification number (Germany)	c547e5a3-e61f-4f86-bd16-6dd68bdc366a
SCIP notification number (Hungary)	41d7e506-db95-431d-b73a-1761a936a781
SCIP notification number (Italy)	bcec32e5-50bb-4ebf-a3fe-9e114bb4487c
SCIP notification number (Netherlands)	5b16312e-a088-470a-b6aa-96e5d01c2d53
SCIP notification number (Poland)	5b2104e4-3b65-4548-a3c9-70c6bcac4fbb

Continued on next page

Environmental Product Compliance

SCIP notification number (Romania)	e8d067a4-94c4-4cb0-a3c1-be578c190f36
SCIP notification number (Sweden)	025393a2-d5d2-4fcb-811f-a9b3ec8dd6cc

Approvals / Certificates

General approvals

Approval	Standard	Certificate Name
KC National Radio Research Agency	Article 58-2, Clause 3	MSIP-REM-W43-AIM750
UL Underwriters Laboratories Inc. (ORDINARY LOCATIONS)	UL 508	E175199

Declarations of conformity and manufacturer's declarations

Approval	Standard	Certificate Name
EU-Declaration of Conformity WAGO GmbH & Co. KG	-	-
UK-Declaration of Conformity WAGO GmbH & Co. KG	-	-

Approvals for marine applications

Approval	Standard	Certificate Name
ABS American Bureau of Shipping	-	25-0415412
BSH Bundesamt fuer Seeschiffahrt und Hydrographie	-	1104
BV Bureau Veritas S.A.	Rules for class. of Steel Ships	66711/A0
DNV DNV GL SE	DNV-CG-0339,Aug.2021	TAA0000194
KR Korean Register of Shipping	-	KR HMB05880-AC001
LR Lloyds Register EMEA	-	LR22180952TA
PRS Polski Rejestr Statków	-	TE/1101/880590/23
RINA RINA Germany GmbH	-	ELE343521XG001

Approvals for hazardous areas

Approval	Standard	Certificate Name
ATEX TUEV Nord Cert GmbH	EN 60079-0	TUEV14ATEX148929X (II 3 G Ex ec IIC T4 Gc)
IECEx TUEV Nord Cert GmbH	IEC 60079-0	IECEx TUN 14.0035 X (Ex ec IIC T4 Gc)
INMETRO TÜV Rheinland do Brasil Ltda.	IEC 60079-0	TÜV 12.1297 X
KTL Korea Testing Laboratory	KOSHA Article 34, IEC60079-0	21-KA4BO-0555X
UKEx WAGO GmbH & Co. KG	EN 60079-0	UKCA_WAGO22UKEX003X_ec
UL Underwriters Laboratories Inc. (HAZARDOUS LOCATIONS)	UL 121201	E198726

Continued on next page

Downloads

Environmental Product Compliance

Compliance Search

Environmental Product Compliance 750-451	

Documentation

Manual

System Manual Series 750/753		
Product Manual 8 AI RTD, Configurable	V 1.2.0	pdf 3936.05 KB

System Description

750/753 Series I/O-System – General Product Information	pdf 953.35 KB
Overview on WAGO-I/O-SYSTEM 750 approvals	pdf 770.48 KB

Bid Text

750-451	19.02.2019	xml 5.04 KB
750-451	20.10.2017	doc 30.50 KB
750-451	20.10.2017	docx 18.13 KB
ausschreiben.de 750-451		

Instruction Leaflet

CCC Ex (Additional information)	26.04.2023	pdf 159.76 KB

Application Notes

Application Note CoDeSys 2.3

Application Note Library ModuleAccess_01	05.01.2016 29.01.2016	zip 1001.22 KB

CAD/CAE-Data

CAD data

2D/3D Models 750-451

CAE data

EPLAN Data Portal 750-451
WSCAD Universe 750-451
ZUKEN Portal 750-451

Continued on next page

Libraries

Library			
ModuleAccess_01.lib	1.8.7 27.01.2020	zip 2114.60 KB	

1 Compatible Products

1.1 Optional Accessories

1.1.1 DIN-rail

1.1.1.1 Mounting accessories



Item No.: 210-196
Aluminum carrier rail; 35 x 8.2 mm; 1.6 mm thick; 2 m long; unslotted; similar to EN 60715; silver-colored



Item No.: 210-198
Copper carrier rail; 35 x 15 mm; 2.3 mm thick; 2 m long; unslotted; according to EN 60715; copper-colored



Item No.: 210-197
Steel carrier rail; 35 x 15 mm; 1.5 mm thick; 2 m long; slotted; similar to EN 60715; silver-colored



Item No.: 210-114
Steel carrier rail; 35 x 15 mm; 1.5 mm thick; 2 m long; unslotted; similar to EN 60715; silver-colored



Item No.: 210-118
Steel carrier rail; 35 x 15 mm; 2.3 mm thick; 2 m long; unslotted; according to EN 60715; silver-colored



Item No.: 210-112
Steel carrier rail; 35 x 7.5 mm; 1 mm thick; 2 m long; slotted; according to EN 60715; "Hole width 25 mm; silver-colored



Item No.: 210-113
Steel carrier rail; 35 x 7.5 mm; 1 mm thick; 2 m long; unslotted; according to EN 60715; silver-colored

1.1.2 Marking

1.1.2.1 Group marker carrier



Item No.: 750-107
Group marker carrier

1.1.2.2 Marker



Item No.: 2009-145/000-006
Mini-WSB Inline; for Smart Printer; 1700 pieces on roll; stretchable 5 - 5.2 mm; plain; snap-on type; blue



Item No.: 2009-145/000-007
Mini-WSB Inline; for Smart Printer; 1700 pieces on roll; stretchable 5 - 5.2 mm; plain; snap-on type; gray



Item No.: 2009-145/000-023
Mini-WSB Inline; for Smart Printer; 1700 pieces on roll; stretchable 5 - 5.2 mm; plain; snap-on type; green



Item No.: 2009-145/000-012
Mini-WSB Inline; for Smart Printer; 1700 pieces on roll; stretchable 5 - 5.2 mm; plain; snap-on type; orange



Item No.: 2009-145/000-005
Mini-WSB Inline; for Smart Printer; 1700 pieces on roll; stretchable 5 - 5.2 mm; plain; snap-on type; red



Item No.: 2009-145/000-024
Mini-WSB Inline; for Smart Printer; 1700 pieces on roll; stretchable 5 - 5.2 mm; plain; snap-on type; violet



Item No.: 2009-145
Mini-WSB Inline; for Smart Printer; 1700 pieces on roll; stretchable 5 - 5.2 mm; plain; snap-on type; white



Item No.: 2009-145/000-002
Mini-WSB Inline; for Smart Printer; 1700 pieces on roll; stretchable 5 - 5.2 mm; plain; snap-on type; yellow



Item No.: 248-501/000-006
Mini-WSB marking card; as card; not stretchable; plain; snap-on type; blue



Item No.: 248-501/000-007
Mini-WSB marking card; as card; not stretchable; plain; snap-on type; gray



Item No.: 248-501/000-023
Mini-WSB marking card; as card; not stretchable; plain; snap-on type; green



Item No.: 248-501/000-017
Mini-WSB marking card; as card; not stretchable; plain; snap-on type; light green



Item No.: 248-501/000-012
Mini-WSB marking card; as card; not stretchable; plain; snap-on type; orange



Item No.: 248-501/000-005
Mini-WSB marking card; as card; not stretchable; plain; snap-on type; red



Item No.: 248-501/000-024
Mini-WSB marking card; as card; not stretchable; plain; snap-on type; violet



Item No.: 248-501
Mini-WSB marking card; as card; not stretchable; plain; snap-on type; white

Continued on next page

1.1.2.2 Marker



Item No.: 248-501/000-002
Mini-WSB marking card; as card; not stretchable; plain; snap-on type; yellow

1.1.2.3 Marker carrier



Item No.: 750-103
Group marker carrier

1.1.3 Shield termination

1.1.3.1 Shield clamping saddles



Item No.: 790-108
Shield clamping saddle; 11 mm wide; diameter of compatible conductor; 3 … 8 mm



Item No.: 790-208
Shield clamping saddle; 12.4 mm wide; 3 … 8 mm



Item No.: 790-116
Shield clamping saddle; 19 mm wide; diameter of compatible conductor; 7 … 16 mm



Item No.: 790-216
Shield clamping saddle; 21.8 mm wide; 6 … 16 mm



Item No.: 790-124
Shield clamping saddle; 27 mm wide; diameter of compatible conductor; 6 … 24 mm



Item No.: 790-220
Shield clamping saddle; 30 mm wide; 6 … 20 mm



Item No.: 790-140
Shield clamping saddle; diameter of compatible conductor

1.1.4 System enclosure

1.1.4.1 System enclosure



Item No.: 850-825
IP65 enclosure; Aluminium (RAL 7032); WxHxD (160x100x160 mm); 9 x M12, 4 x M20



Item No.: 850-826
IP65 enclosure; Aluminium (RAL 7032); WxHxD (240x100x160 mm); 4 x M20, 4 x M16, 14 x M12 cable grip



Item No.: 850-827
IP65 enclosure; Aluminium (RAL 7032); WxHxD (320x100x160 mm); 4 x M20, 8 x M16, 17 x M12 cable grip



Item No.: 850-828
IP65 enclosure; Aluminium (RAL 7032); WxHxD (480x100x160 mm); 4 x M20, 10 x M16, 35 x M12 cable grip



Item No.: 850-826/002-000
IP65 enclosure; Aluminium (RAL 7035); WxHxD (240x100x160 mm); 4 x M20, 4 x M16, 14 x M12 cable grip



Item No.: 850-827/002-000
IP65 enclosure; Aluminium (RAL 7035); WxHxD (320x100x160 mm); 4 x M20, 8 x M16, 17 x M12 cable grip



Item No.: 850-828/002-000
IP65 enclosure; Aluminium (RAL 7035); WxHxD (480x100x160 mm); 4 x M20, 10 x M16, 35 x M12 cable grip



Item No.: 850-834
IP65 enclosure; Polyester (RAL 7032); WxHxD (164x100x164 mm); 9 x M12, 4 x M20



Item No.: 850-835
IP65 enclosure; Polyester (RAL 7032); WxHxD (244x100x164 mm); 4 x M20, 4 x M16, 14 x M12 cable grip



Item No.: 850-836
IP65 enclosure; Polyester (RAL 7032); WxHxD (324x100x164 mm); 4 x M20, 8 x M16, 17 x M12 cable grip



Item No.: 850-814/002-000
IP65 enclosure; Sheet steel (RAL 7035); WxHxD (200x120x200 mm); without flange plate



Item No.: 850-815/002-000
IP65 enclosure; Sheet steel (RAL 7035); WxHxD (300x120x200 mm); without flange plate



Item No.: 850-816/002-000
IP65 enclosure; Sheet steel (RAL 7035); WxHxD (400x120x200 mm); without flange plate



Item No.: 850-817/002-000
IP65 enclosure; Sheet steel (RAL 7035); WxHxD (600x120x200 mm); without flange plate

Continued on next page

1.1.5 Tool

1.1.5.1 Operating tool



Item No.: 210-719
Operating tool; Blade: 2.5 x 0.4 mm; with a partially insulated shaft