Data Sheet | Item Number: 750-452

2-channel analog input; 0 … 20 mA; Differential input

https://www.wago.com/750-452

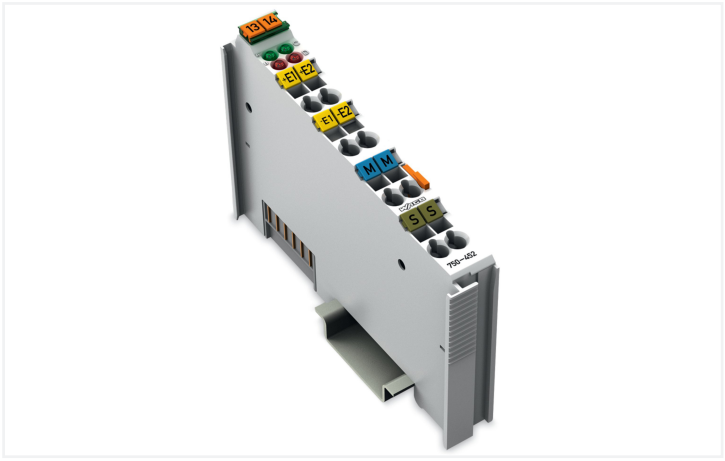

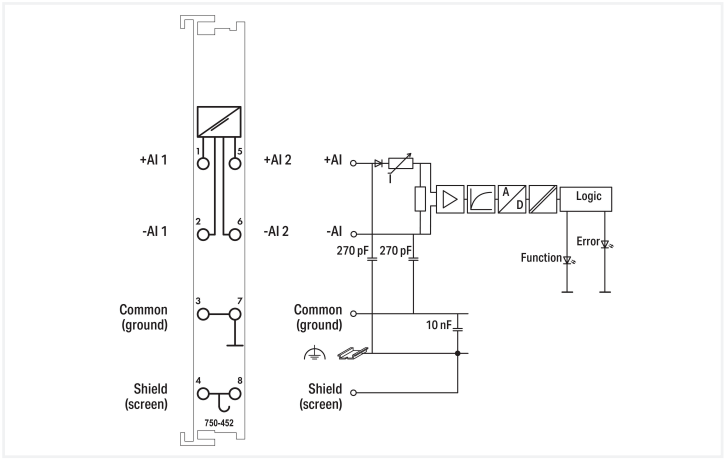

Color: light gray

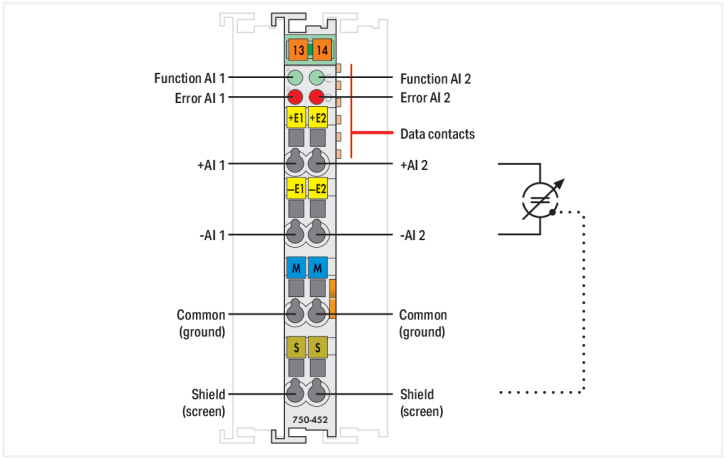

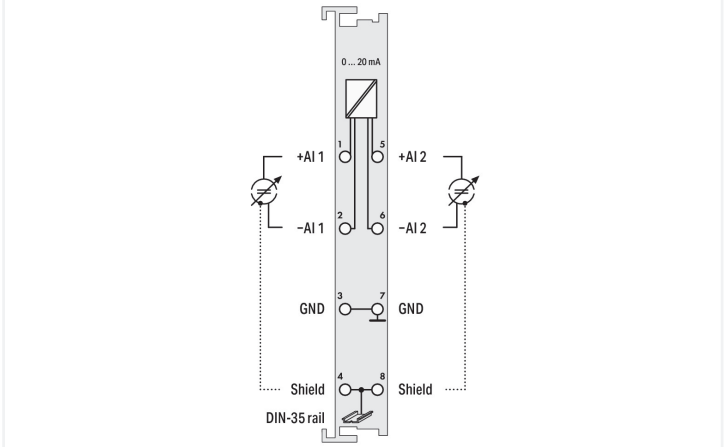

This analog input module processes standard 0–20 mA signals.
The input signal is electrically isolated and is transmitted with a resolution of 12 bits.
The internal system supply powers the module.
The input channels of the module are differential inputs.
The shield directly connects to the DIN-rail.

Technical data	
Number of analog inputs	2
Total number of channels (module)	2
Signal type	Current
Signal type (current)	0 … 20 mADC
Sensor connection	2 x (2-wire)
Input voltage (max.)	35 V
Signal characteristics	Differential
Resolution [bit]	12 bits
Input resistance (max.)	220 Ω
Data width	2 x 16-bit data; 2 x 8-bit control/status (optional)
Conversion time (typ.)	2 ms
Measurement error (reference temperature)	25 °C
Measurement error, deviation (max.) from the upper-range value	0.2 %

Continued on next page

Technical data

Temperature error (max.) of the upper-range value	0.01 %/K
Supply voltage (system)	5 VDC; via data contacts
Current consumption (system supply)	70 mA
Isolation	500 V system/field
Indicators	LED (A, C) green: Function AI 1, AI 2; LED (B, D) red: Error AI 1, AI 2

Connection Data

Connection technology: I/O	8 x CAGE CLAMP®
Connectable conductor materials	Copper
Connection type	Inputs/outputs
Solid conductor	0.08 … 2.5 mm² / 28 … 14 AWG
Fine-stranded conductor	0.08 … 2.5 mm² / 28 … 14 AWG
Strip length	8 … 9 mm / 0.31 … 0.35 inches

Physical data

Width	12 mm / 0.472 inches
Height	100 mm / 3.937 inches
Depth	69.8 mm / 2.748 inches
Depth from upper-edge of DIN-rail	62.6 mm / 2.465 inches

Mechanical data

Mounting type	DIN-35 rail
Pluggable connector	fixed

Material data

Color	light gray
Housing material	Polycarbonate; polyamide 6.6
Fire load	0.899 MJ
Weight	50.5 g
Conformity marking	CE

Environmental requirements

Ambient temperature (operation)	0 … +55 °C
Ambient temperature (storage)	-40 … +85 °C
Protection type	IP20
Pollution degree	2 per IEC 61131-2
Operating altitude	0 … 2000 m / 0 … 6562 ft
Mounting position	Horizontal left, horizontal right, horizontal top, horizontal bottom, vertical top and vertical bottom
Relative humidity (without condensation)	95 %
Vibration resistance	4g per IEC 60068-2-6
Shock resistance	15g per IEC 60068-2-27
EMC immunity to interference	per EN 61000-6-2, marine applications
EMC emission of interference	per EN 61000-6-4, marine applications
Exposure to pollutants	per IEC 60068-2-42 and IEC 60068-2-43
Permissible H_2S contaminant concentration at a relative humidity 75 %	10 ppm
Permissible SO_2 contaminant concentration at a relative humidity 75 %	25 ppm

Continued on next page

Commercial data

Product Group	15 (I/O System)
PU (SPU)	1 pcs
Packaging type	Box
Country of origin	DE
GTIN	4045454484040
Customs tariff number	85437090990

Product Classification

UNSPSC	32101502
eCl@ss 10.0	27-24-26-01
eCl@ss 9.0	27-24-26-01
ETIM 9.0	EC001596
ETIM 10.0	EC001596
ECCN	NO US CLASSIFICATION

Environmental Product Compliance

CAS-No.	1303-86-2 1317-36-8 7439-92-1
REACH Candidate List Substance	Diboron trioxide Lead Lead monoxide
RoHS Compliance Status	Compliant,With Exemption
RoHS Exemption	6(c) 7(a) 7(c)-I 7(c)-II
SCIP notification number (Austria)	38a2f1ef-9ec2-4daf-b02e-91755adb4e8d
SCIP notification number (Belgium)	058e53dd-4437-4f03-859a-0daaefd854e4
SCIP notification number (Bulgaria)	8470dda5-44ec-4c1b-9fc6-7990ad84ab5d
SCIP notification number (Czech Republic)	8bd4aa47-18e9-47a9-b933-be751913c487
SCIP notification number (Denmark)	7cda3a0d-8c27-445d-ba99-22ac7eae14cf
SCIP notification number (Finland)	f9e6770d-b74e-4564-bed8-2f495ef3b0f3
SCIP notification number (France)	a4781fd4-63e1-49b3-87d8-abd2f15b754f
SCIP notification number (Germany)	2182760a-045e-42a1-a1cf-78159d0693ef
SCIP notification number (Hungary)	4f74fab9-e60e-434a-9931-357ecba638ce
SCIP notification number (Italy)	012f7c41-2dfc-4905-81f7-f350c756af46
SCIP notification number (Netherlands)	0ca44209-8c40-4800-aafe-9205ba080577
SCIP notification number (Poland)	e19b3ac3-1240-40e8-894f-9abee1610175
SCIP notification number (Romania)	9590fc57-71b2-469b-be67-8e8c21ee7dd0
SCIP notification number (Sweden)	35a70de4-a80d-49a1-a82f-58e8fb53486c

Approvals / Certificates

General approvals

Approval	Standard	Certificate Name
EAC GZO Almaty Standart	TP TC 020/2011	EAC CoC 03083
KC National Radio Research Agency	Article 58-2, Clause 3	MSIP-REM-W43-AIM750

General approvals

UL Underwriters Laboratories Inc. (ORDINARY LOCATIONS)	UL 508	E175199

Continued on next page

Declarations of conformity and manufacturer's declarations

Approval	Standard	Certificate Name
EU-Declaration of Conformity WAGO GmbH & Co. KG	-	-
UK-Declaration of Conformity WAGO GmbH & Co. KG	-	-

Approvals for hazardous areas

Approval	Standard	Certificate Name
ATEX TUEV Nord Cert GmbH	EN 60079-0	TUEV14ATEX148929X (II 3 G Ex ec IIC T4 Gc)
CCCEx CQST/CNEx	CNCA-C23-01	2020312310000213 (Ex ec IIC T4 Gc)
IECEx TUEV Nord Cert GmbH	IEC 60079-0	IECEx TUN 14.0035 X (Ex ec IIC T4 Gc)
INMETRO TÜV Rheinland do Brasil Ltda.	IEC 60079-0	TÜV 12.1297 X
UKEx WAGO GmbH & Co. KG	EN 60079-0	UKCA_WA GO22UKEX003X_ec
UL Underwriters Laboratories Inc. (HAZARDOUS LOCATIONS)	UL 121201	E198726

Approvals for marine applications

Approval	Standard	Certificate Name
ABS American Bureau of Shipping	-	25-0415412
BSH Bundesamt fuer Seeschiffahrt und Hydrographie	-	1104
BV Bureau Veritas S.A.	-	13453/E0 BV
DNV DNV GL SE	DNV-CG-0339,Aug.2021	TAA0000194
KR Korean Register of Shipping	-	KR HMB05880-AC001
LR Lloyds Register EMEA	-	LR22180952TA
PRS Polski Rejestr Statków	-	TE/1101/880590/23
RINA RINA Germany GmbH	-	ELE343521XG001

Continued on next page

Downloads

Environmental Product Compliance

Compliance Search

Environmental Product Compliance 750-452	

Documentation

Manual

Product Manual 2-channel, 0-20mA, diff.	V 1.1.0	pdf 2132.45 KB	
System Manual Series 750/753			

System Description

750/753 Series I/O-System – General Product Information	pdf 953.35 KB	
Overview on WAGO-I/O-SYSTEM 750 approvals	pdf 770.48 KB	

Bid Text

750-452	19.02.2019	xml 4.17 KB	
750-452	17.10.2017	doc 27.50 KB	
750-452	17.10.2017	docx 16.58 KB	

Instruction Leaflet

CCC Ex (Additional information)	26.04.2023	pdf 159.76 KB	

CAD/CAE-Data

CAD data

2D/3D Models 750-452	

CAE data

EPLAN Data Portal 750-452	
WSCAD Universe 750-452	
ZUKEN Portal 750-452	

Device Files

Device Driver

WAGO USB Service Kabel Treiber / Serie 750 und 857	6.5.3.0 10.09.2014	zip 4721.96 KB	

 Continued on next page

1 Compatible Products

1.1 Optional Accessories

1.1.1 DIN-rail

1.1.1.1 Mounting accessories



Item No.: 210-196
Aluminum carrier rail; 35 x 8.2 mm; 1.6 mm thick; 2 m long; unslotted; similar to EN 60715; silver-colored



Item No.: 210-198
Copper carrier rail; 35 x 15 mm; 2.3 mm thick; 2 m long; unslotted; according to EN 60715; copper-colored



Item No.: 210-197
Steel carrier rail; 35 x 15 mm; 1.5 mm thick; 2 m long; slotted; similar to EN 60715; silver-colored



Item No.: 210-114
Steel carrier rail; 35 x 15 mm; 1.5 mm thick; 2 m long; unslotted; similar to EN 60715; silver-colored



Item No.: 210-118
Steel carrier rail; 35 x 15 mm; 2.3 mm thick; 2 m long; unslotted; according to EN 60715; silver-colored



Item No.: 210-112
Steel carrier rail; 35 x 7.5 mm; 1 mm thick; 2 m long; slotted; according to EN 60715; "Hole width 25 mm; silver-colored



Item No.: 210-113
Steel carrier rail; 35 x 7.5 mm; 1 mm thick; 2 m long; unslotted; according to EN 60715; silver-colored

1.1.2 Marking

1.1.2.1 Group marker carrier



Item No.: 750-106
Group marker carrier

1.1.2.2 Marker



Item No.: 750-100
Marker card; as a DIN A4 sheet; plain



Item No.: 2009-145/000-006
Mini-WSB Inline; for Smart Printer; 1700 pieces on roll; stretchable 5 - 5.2 mm; plain; snap-on type; blue



Item No.: 2009-145/000-007
Mini-WSB Inline; for Smart Printer; 1700 pieces on roll; stretchable 5 - 5.2 mm; plain; snap-on type; gray



Item No.: 2009-145/000-023
Mini-WSB Inline; for Smart Printer; 1700 pieces on roll; stretchable 5 - 5.2 mm; plain; snap-on type; green



Item No.: 2009-145/000-012
Mini-WSB Inline; for Smart Printer; 1700 pieces on roll; stretchable 5 - 5.2 mm; plain; snap-on type; orange



Item No.: 2009-145/000-005
Mini-WSB Inline; for Smart Printer; 1700 pieces on roll; stretchable 5 - 5.2 mm; plain; snap-on type; red



Item No.: 2009-145/000-024
Mini-WSB Inline; for Smart Printer; 1700 pieces on roll; stretchable 5 - 5.2 mm; plain; snap-on type; violet



Item No.: 2009-145
Mini-WSB Inline; for Smart Printer; 1700 pieces on roll; stretchable 5 - 5.2 mm; plain; snap-on type; white



Item No.: 2009-145/000-002
Mini-WSB Inline; for Smart Printer; 1700 pieces on roll; stretchable 5 - 5.2 mm; plain; snap-on type; yellow



Item No.: 248-501/000-006
Mini-WSB marking card; as card; not stretchable; plain; snap-on type; blue



Item No.: 248-501/000-007
Mini-WSB marking card; as card; not stretchable; plain; snap-on type; gray



Item No.: 248-501/000-023
Mini-WSB marking card; as card; not stretchable; plain; snap-on type; green



Item No.: 248-501/000-017
Mini-WSB marking card; as card; not stretchable; plain; snap-on type; light green



Item No.: 248-501/000-012
Mini-WSB marking card; as card; not stretchable; plain; snap-on type; orange



Item No.: 248-501/000-005
Mini-WSB marking card; as card; not stretchable; plain; snap-on type; red



Item No.: 248-501/000-024
Mini-WSB marking card; as card; not stretchable; plain; snap-on type; violet



Item No.: 248-501
Mini-WSB marking card; as card; not stretchable; plain; snap-on type; white



Item No.: 248-501/000-002
Mini-WSB marking card; as card; not stretchable; plain; snap-on type; yellow

Continued on next page

1.1.2.3 Marker carrier



Item No.: 750-103
Group marker carrier

1.1.3 Shield termination

1.1.3.1 Shield clamping saddles



Item No.: 790-108
Shield clamping saddle; 11 mm wide; diameter of compatible conductor; 3 … 8 mm



Item No.: 790-208
Shield clamping saddle; 12.4 mm wide; 3 … 8 mm



Item No.: 790-116
Shield clamping saddle; 19 mm wide; diameter of compatible conductor; 7 … 16 mm



Item No.: 790-216
Shield clamping saddle; 21.8 mm wide; 6 … 16 mm



Item No.: 790-124
Shield clamping saddle; 27 mm wide; diameter of compatible conductor; 6 … 24 mm



Item No.: 790-220
Shield clamping saddle; 30 mm wide; 6 … 20 mm



Item No.: 790-140
Shield clamping saddle; diameter of compatible conductor

1.1.4 System enclosure

1.1.4.1 System enclosure



Item No.: 850-825
IP65 enclosure; Aluminium (RAL 7032); WxHxD (160x100x160 mm); 9 x M12, 4 x M20



Item No.: 850-826
IP65 enclosure; Aluminium (RAL 7032); WxHxD (240x100x160 mm); 4 x M20, 4 x M16, 14 x M12 cable grip



Item No.: 850-827
IP65 enclosure; Aluminium (RAL 7032); WxHxD (320x100x160 mm); 4 x M20, 8 x M16, 17 x M12 cable grip



Item No.: 850-828
IP65 enclosure; Aluminium (RAL 7032); WxHxD (480x100x160 mm); 4 x M20, 10 x M16, 35 x M12 cable grip



Item No.: 850-826/002-000
IP65 enclosure; Aluminium (RAL 7035); WxHxD (240x100x160 mm); 4 x M20, 4 x M16, 14 x M12 cable grip



Item No.: 850-827/002-000
IP65 enclosure; Aluminium (RAL 7035); WxHxD (320x100x160 mm); 4 x M20, 8 x M16, 17 x M12 cable grip



Item No.: 850-828/002-000
IP65 enclosure; Aluminium (RAL 7035); WxHxD (480x100x160 mm); 4 x M20, 10 x M16, 35 x M12 cable grip



Item No.: 850-834
IP65 enclosure; Polyester (RAL 7032); WxHxD (164x100x164 mm); 9 x M12, 4 x M20



Item No.: 850-835
IP65 enclosure; Polyester (RAL 7032); WxHxD (244x100x164 mm); 4 x M20, 4 x M16, 14 x M12 cable grip



Item No.: 850-836
IP65 enclosure; Polyester (RAL 7032); WxHxD (324x100x164 mm); 4 x M20, 8 x M16, 17 x M12 cable grip



Item No.: 850-814/002-000
IP65 enclosure; Sheet steel (RAL 7035); WxHxD (200x120x200 mm); without flange plate



Item No.: 850-815/002-000
IP65 enclosure; Sheet steel (RAL 7035); WxHxD (300x120x200 mm); without flange plate



Item No.: 850-816/002-000
IP65 enclosure; Sheet steel (RAL 7035); WxHxD (400x120x200 mm); without flange plate



Item No.: 850-817/002-000
IP65 enclosure; Sheet steel (RAL 7035); WxHxD (600x120x200 mm); without flange plate